SOUTHERN RAILWAYS *Magazine*

1076
2-56
OFFICE OF THE REGISTRAR OF BOOKS
25 MAY 1956
MADRAS

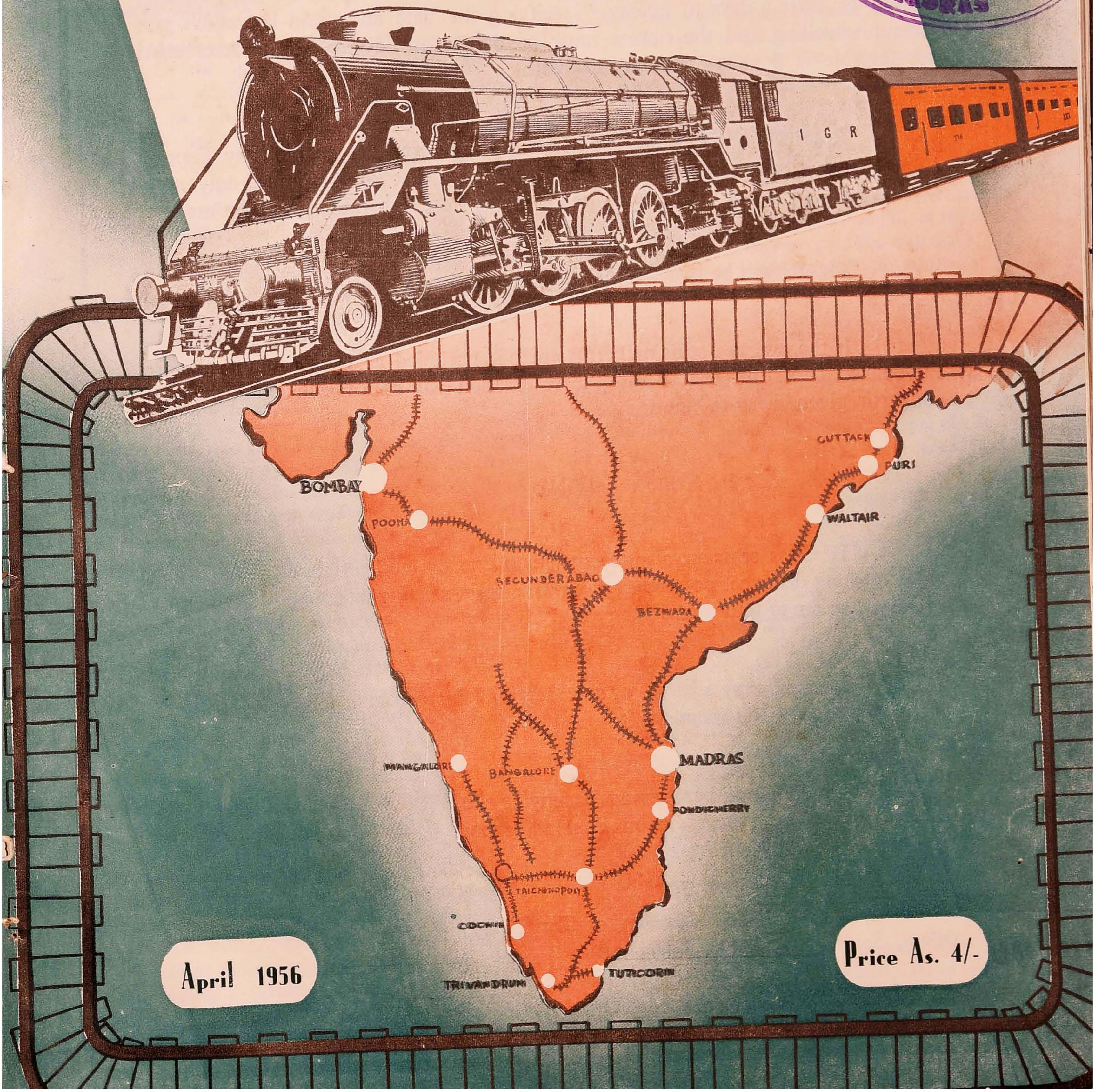

April 1956

Price As. 4/-

HOW TO RESERVE ACCOMMODATION

Unless you reserve your berth (I and II Class) or Seat (3rd Class long distance) in advance, you may not be sure of getting accommodation on the train you wish to travel by.

Application should be made to the Station Master of your starting station at least 3 days in advance specifying the date and train by which you intend travelling and the tickets must be bought in advance. The reservation fee leviable is 8 annas per seat or berth.

Reservation by I and II Class from intermediate stations by Express trains can also be made similarly, but reservation ticket can be issued only after getting an advice from the Reservation Centre that the reservation has been made.

Tickets will be issued only if accommodation is available.

If the reserved seats or berths are not occupied at least 5 minutes before the booked departure of the train the reservation will be cancelled and the seat or berth given away to another.

Reservation fee is not refundable.

III Class seats are also reservable on Express and certain other important trains for long distance passengers from the train-starting stations on payment of a reservation fee of four annas per seat.

Do not occupy a berth or seat reserved for another, as you are liable to be displaced at the last moment.

If you find another person occupying the berth or seat reserved for you and if he will not vacate it on demand, report it to the Guard or Station Master. They will help you.

(Inserted in the interests of Travelling Public by the Public Relations Officer, Southern Railways Magazine)

Tyre Profile—its influence on the behaviour of a Locomotive

By M. S. Surma, Indian Railways Testing & Research Centre, Alambagh, Lucknow.

THE tyre profile has some influence on the stability of a locomotive. A good contour of the tyre raises the critical speed, at which instability in riding tends to appear.

Lot of literature, mathematical as well as descriptive is available on the subject, and the contributions of M/S. Davies, Carter and Cain are commendable. Mr. Nadal has dealt with the subject relating to the slope of the flange at the gauge face. The formula, developed from the line of analysis followed by him, has been found to suffer from a discrepancy, which has been removed by Mr. R. G. da Costa in his papers entitled "Riding of pacific locos" and "Notes on wheel flange profile".

The tyre profile may be divided into two sections.

(i) Tread profile and

(ii) Flange profile

TREAD PROFILE

In the earlier days of locomotive practice, the tyres of the railway vehicles were provided with parallel treads, but later on coning was introduced. An inclination of 1 in 20, for the tread, was adopted by all the railways, with one exception i. e. The New York Central* Lines which preferred 1 in 38 to the standard coning.

The counter of the tyre is a disputed item and the railway engineers have divergent views on its optimum taper. Though 1 in 20 taper has been adopted, with the rails canted to suit, cylindrical tyres have also been tried by investigators in different countries. It is claimed in certain quarters, that cylindrical tyres afford better riding qualities—a fact which has yet to be established.

The riding of a vehicle depends upon so many factors and the influence of the tyre profile is one of them. Tyre profile affects the riding characteristics in so far as the sinous motion in the track is concerned. If by the adoption of a particular tyre profile, the wave length of the sinous motion can be increased and its amplitude decreased, there will be found a considerable improvement in the riding. Both the objects stated above can be achieved by reducing the inclination of the coning and by having a suitable slope and thickness of the flange.

Wear on the tread is another important factor affecting the riding qualities. In normal practice as the rails are canted to suit the standard taper of the tread, a tyre with an angle of inclination other than the standard, will start developing wear and before long will get the taper to match the rail cant. Experiments on L. M. S. Rly. have shown that in the duration of this period the riding is seriously affected and as the wear approaches the rail cant there is a gradual improvement. A second flange, on account of this wear is, therefore, formed towards the outer edge of the tyre. This second flange may, to some extent, reduce the amplitude of the sine wave (this cannot be said definitely) but is sure to set up a vertical periodic vibration, and if, at any time, the frequency of this vibration coincides with that of the natural frequency of the "rolling" the vehicle will be subjected to a violent oscillation.

The tendency of the formation of this second flange is found on cylindrical as well as on coned tyres, but to a greater degree on the former. Its depth on the wheels, having no brakes, is still greater. The French Railways have got over this trouble by having a taper of 1 in 10 for a distance of 1—3/16" from the outer edge of the tyre. Figure No. 1 shows the profiles of the treads adopted by the Indian and French Railways.

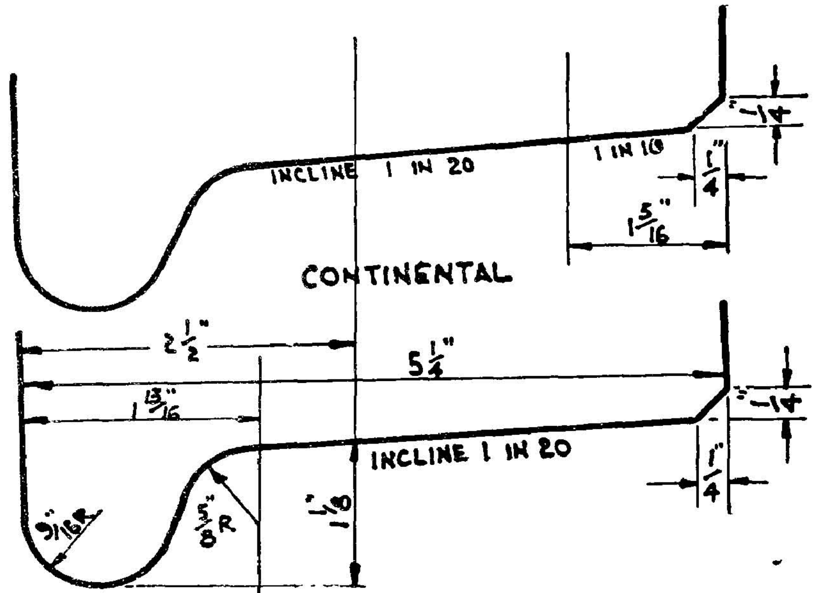

I.R.S. FIG 1

Another draw back in the cylindrical tyres is the unavoidable difference in the diameters, ever so slight, of the pair of wheels fitted on to a single axle. The normal

* Report of Japanese National Railway Int. Rly. Cong. Buln. 1933.

difference allowed in the shop practice is of the order of 1/32". If, therefore, the tyres are coned, the wheels will adjust themselves in the track, but if cylindrical some degree of relative slipping must occur. On the curves, the wheel running on the outer rail has to travel a greater distance, than that running on inner rail. Here again excessive slipping of the wheel in the case of cylindrical treads, cannot be avoided. It was probably due to this reason that the cylindrical wheels made way for the coned wheels.

CONING OF THE TREADS

Effect of coning on a straight track:—Two wheels of equal diameter having coned tread, when rigidly fixed onto a single axle, if undisturbed by an external lateral force, will run central in the track, the diameter at the points of contact being the same. When disturbed, they will run on different diameters. The wheel running on bigger diameter will try to go ahead of the one running on smaller diameter. The axle will then no longer be running normal to the track but will make an agle with it. A stage will then be reached, when the axle is forced to rotate and get a skew, until the opposite wheel starts running on a bigger diameter. The result is an oscillatary movement and nosing of the vehicle on the track. The wave length of this nosing oscillation, as given by Klingel is,

$$D = 2\Pi \sqrt{\frac{r.a}{i}} \qquad \ldots\ldots\ldots\ldots(1)$$

Notations are given in appendix I.

Fig. 2 shows the behaviour of an axle as stated above.

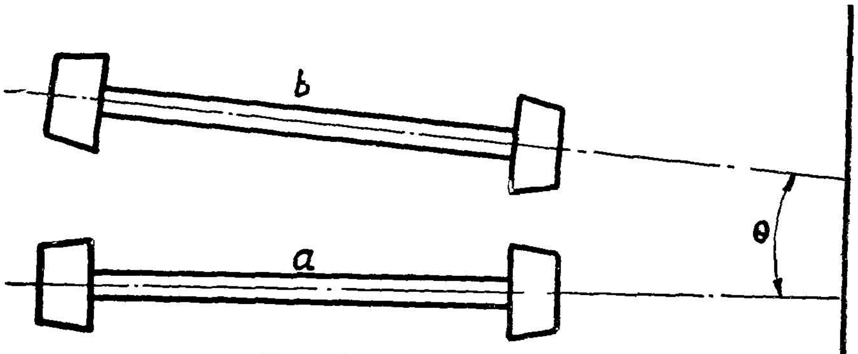

FIG 2

If a number of pairs of wheels, fitted on axles, and grouped together under a common chasis, are moving on a track they will also behave in a similar way, if the conditions given below are fulfilled.

(i) Weight on all the wheels must be equal

(ii) Diameters of all the wheels must be the same

(iii) All axles must be parallel to each other

(iv) No longitudinal play exists between the axle box and the guides

(v) Taper of all the tyres must be identical

(vi) No lateral control exists except the unavoidable tread friction

(vii) No irregularity exists in the track

Any departure from the above conditions will affect the wave length of the motion. No data is available, as to the extent of the influence of the above said items, individually or collectively. Some amount of modification of this wave length will positively occur as none of the above considerations can be rigidly fulfilled.

Uptill now the investigators have conducted experiments on single and double axle trucks. Klingel was probably the first to publish data (Year 1883) for a single axle truck. Since his time the subject has been under the investigation of some of the eminent engineers of the world and the behaviour of these trucks has been reduced to mathematical equations.

The equation for a single axle which Klingel evolved in 1883 has been accepted as 'perfect' by all the investigators but there is no consensus of opinion in formulating the equation for a double axle truck. All the investigators differ with each other. In the case of a double axle truck the form of equation for the wave length, given by various investigators is:

$$D' = D.K \qquad \ldots\ldots\ldots\ldots(2)$$

Where K is a multiplying factor.

For a bogie having 8' wheel base the value of K according to different investigators is:

(i) According to Bedecker K		= 1.75
(ii) „ „	Davies and Cain K	= 1.8
(iii) „ „	Heumann K	= 2.1
(iv) „ „	Recard and Carter K	= 2.5

The problem of trucks having axles more than two in one chassis, for example, the coupled wheel truck of a locomotive, have not been taken up by any of the investigators, and nothing can be said about the influence of the coning in the stability of these trucks.

The effect of coning on the heavy vehicles is small on account of heavy moment of inertia about a vertical axis, and higher damping effect due to greater friction between rail and tyre. But its effect on the light weight stock is pronounced.

Dr. Davies in his paper "Some experiments on the lateral oscillations of rail vehicles" has dealt with this subject and states, that nosing oscillation once started, goes on building up on account of the action of coning, unless there is sufficient damping action. Mr. B. S. Cain in his paper "Notes on the dynamics of the electric locos." has investigated the influence of coning on the critical speed of a locomotive. The method adopted by him is based on the calculation of energy input on account of disturbing forces and energy dissipated by the damping forces. He states that the coning reduces the critical speed by about 8% on straight or nearly straight track, in the case of larger wheels. His formula is given below:

$$^{*}V = 2\,w \sqrt{\frac{\Sigma f\,(i^2+a^2)}{\Sigma f}} \times \frac{1}{1+a.i\,\frac{(\Sigma f/r)}{\Sigma f}} \quad \ldots.(3)$$

For the meaning of symbols please see Appendix I.

Effect of the coning on curves :—On curves two wheels of one axle, will run on different diameters, the outer running on bigger. This is an advantage as the outer has to travel a longer distance than the inner wheel. This is what is generally said. But there is another thing to mention, that the inter wheels which generally guide against the inner rail also run on bigger diameter. The above stated advantage is lost in the case of these wheels.

At the speeds, say, about 40 M. P. H., taking the case of a Pacific locomotive, the bogie wheels and the leading coupled wheel bind against the outer rail, and driving and trailing against the inner. In the case of turn-outs, the bogie wheels being against the outer rail and the coupled wheels against the inner. The coning, therefore, in the case of these wheels which bind against the inner rail, defeats its purpose.

In my opinion the coning in these cases (where wheels bind against the inner rail) helps the locomotive to screw itself round the curve, thus giving relief to the leading wheel which is subjected to the maximum amount of guiding force. At speeds well over 45 M.P.H. the locomotive under the influence of centrifugal force and heavy control at the front is screwed round the curve, even without the help of coning.

It will be clear from the foregoing that the profile of the tread, whether cylindrical or conical, has merits and demerits, and there is little to choose between the two. Certain railways have tried different tread profiles, but none has given definite decision in the favour of any inclination. However, some investigators have recommended 1 in 100 taper. But unless the cant of the rail is changed to match this taper, little advantage will be gained, as the tread will soon wear to the rail cant. In the case of this taper, or any other reduced inclination of the coning, the flange rail contact will be below the root of the flange. This is undesirable from the riding point of view and will be discussed later. Figure No. 3 shows the flange rail contact in the case of standard and cylindrical tyres with the rails canted to suit the former.

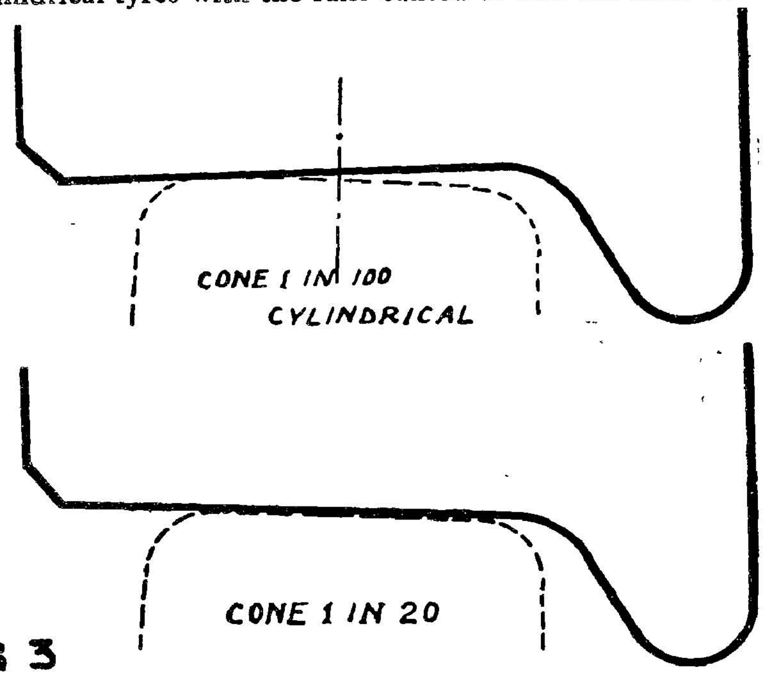

FIG 3

FLANGE PROFILE

The profile of the flange may be devided into two parts.

(i) Thickness of the flange and
(ii) Slope of the flange at the gauge face.

Indian investigators have recommended that for better behaviour of the locomotives the thickness of the flanges should be,

(i) Greater at the extreme wheels.
(ii) Standard at the leading and trailing wheels.
(iii) Smaller at the inter wheels.

There are two effects of this set of flanges. The first is that the angularity of the wheel base in the track is deduced due to the reduction in the lateral clearance at the extreme wheels. This results in lower flange impacts on the rail. Secondly when we consider a locomotive entering in a curve, it is found, that the first wheel to come in contact with the rail is the outer leading wheel of the front truck. In the case of a bogie, when the forces acting on it attain a certain

* Dynamics of electric locos. by B. S. Cain.

magnitude the trailing wheel also comes in contact with the outer rail. If the centrifugal force is sufficient, the outer leading coupled wheel will also shift towards the outer rail; but before it could make a contact with the outer rail, the control mechanism comes into action and the intensity of the wheel impact is reduced.

The reason for the thin flanges on the inter wheels is that as they are quite near the centre of gravity of the locomotive, they do not perform any guiding work. Therefore it is better that they do not come in contact with the rail at all. Taking off these flanges has been advocated by almost all the eminent engineers of the world. Mr. da Costa has dealt with the subject in his paper "Riding of pacific locos." He states that on sharper curves of less than 2000 ft. radius, at cruising speeds, the engine is subjected to a screwing action. The driving wheel at this instant is touching the inner rail. The leading coupled wheel under the influence of a very heavy control drifts towards the inner rail and the trailing coupled towards the outer rail. The driving wheel acts as a fulcrum. A condition is then reached when the bogie control becomes too less and the leading coupled wheel again moves back to the outer rail. This oscillation goes on repeating till the engine is able to attain stability again.

From the foregoing it can be safely concluded, that even with the thin flanges at the inter wheels, the question of their infringement with the inner rail on curves and turn-outs cannot be solved. At this infringement contributes to instability and produces heavy stresses on the vehicle and the track, a better practice may be to remove them. On locomotives which fit in the turn-outs and sharp curves without any infringement, the need of removing these flanges may not arise.

Recent analysis done by Mr. da Costa confirms that it is advisable to remove the flanges of the intermediate wheels. In the case of locomotives fitted with bar frames, as they afford comparatively little flexibility on the curves and turn-outs, the possibility of the flange infringement is still greater. Therefore, to avoid heavy stresses in the track and the locomotive parts, it would be a better practice to remove these flanges.

To avoid any infringements at the nose of the turn-outs, by the wheels fitted with thin and thick flanges, the amount of the thickness increased or decreased on the gauge face should be increased or decreased on the opposite side of the gauge face of the flange.

SLOPE OF FLANGE

Another very important factor in the profile of a flange is its slope at the gauge face, which determines the point of flange rail contact. It is this slope of flange on which depends the safety of millions of passengers travelling daily by the trains. This will be briefly discussed in this note, and those, sufficiently interested in the subject, are requested to refer, for a detailed analysis, to,

(i) Notes on wheel flange profile by Mr. da Costa.

(ii) Development of electric locos. in Switzerland by Dr. Boygeaurd.

It will be seen from the following analysis that there is a limit for the slope of the flange with respect to horizontal, for safety. Any increase in the wear on the flange gauge face, results in a corresponding increase in the angularity of the wheel base in the track, and brings the flange rail contact below the root of flange which is a source of danger. In the extreme angularity cases the flange may contact the rail just at its tip. As will be shown by the application of Nadal's formula for safe lateral loads, the tendency for the flange to mount the rail table even under the influence of relatively smaller lateral load, will be greater.

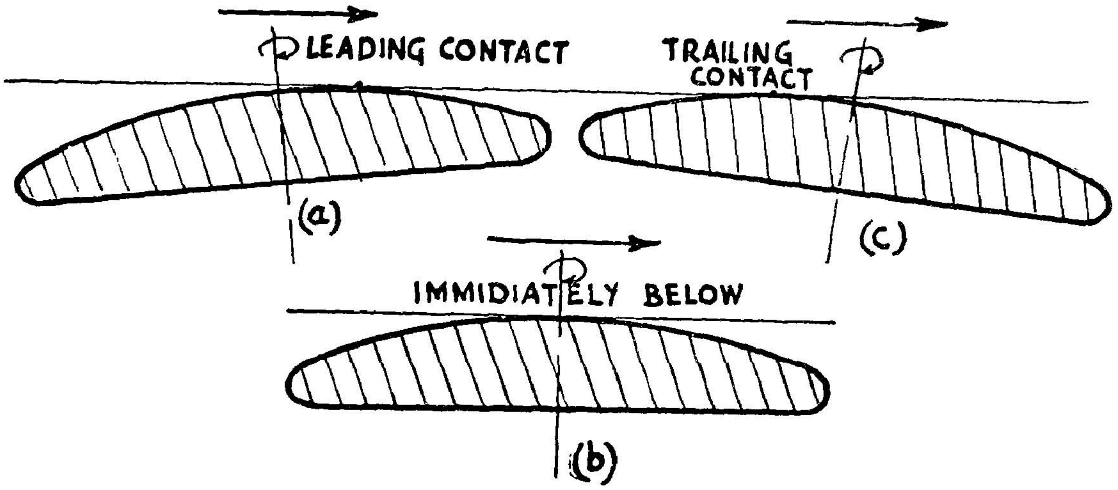

HORIZONTAL SECTION THRO POINT OF CONTACT

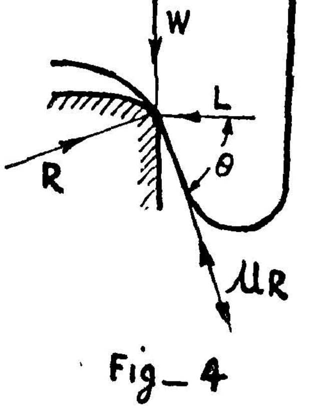

Fig_4

While running on a curved track there are three possible points of flange rail contact.

(i) The flange may contact the rail, at the point, ahead of the vertical through the axle centre. This will be called a leading contact. Fig. 4(a)

(ii) The flange may contact the rail, at a point, on the vertical through the axle centre. This will be called centre contact. Fig. 4(b)

(iii) The flange may contact the Rail behind the vertical through the axle centre. This will be called trailing contact. Fig. 4(c)

Let us now consider the wheel moving along the rail, making a contact ahead of the vertical through the axle centre. As the flange moves along the inner side of the rail, its tendency to mount the rail table is greater as the friction is also opposing. The forces acting at the flange are,

(i) Lateral force

(ii) Vertical wheel load

(iii) Friction between the rail, and flange

(iv) Reaction of the rail

By resolving these forces in the line of action of UR the components of the forces acting downwards should be greater in magnitude than the components acting upwards. Therefore if the wheel is not to derail,

$$W \cos (90-\theta) \; 7 \; L \cos \theta + UR$$

$$\text{or } L \cos \theta + UR \angle W \sin \theta \qquad \ldots.(4)$$

$$R = W \cos \theta + L \sin \theta \qquad \ldots.(5)$$

Substituting (5) for R in (4) we get,

$$L (\cos \theta + U \sin \theta) \angle W (\sin \theta - U \cos \theta)$$

$$L \angle W \frac{\sin \theta - U \cos \theta}{\cos \theta + U \sin \theta} \qquad \ldots.(6)$$

If the flange is making a trailing contact, the friction helps and the wheel requires a lateral load of sufficient magnitude to mount the rail table. In this case, if the wheel is not to derail, then,

$$L \cos \theta \angle W \sin \theta + UR \qquad \ldots.(7)$$

$$R = W \cos \theta + L \sin \theta \qquad \ldots.(8)$$

$$L (\cos \theta - U \sin \theta) \angle W (\sin \theta + U \cos \theta)$$

$$L \angle W \frac{\sin \theta + U \cos \theta}{\cos \theta - U \sin \theta} \qquad \ldots.(9)$$

Taking the value of U as .25 and that of θ as 45° and 75° the safe lateral load will be .63 W and 1.6 W for the leading contact respectively and 1.7 W and very large respectively in the case of a trailing contact.

The foregoing analysis shows that an increase in wear on the flange gauge face helps the wheel to withstand heavier lateral load before it could derail. But in actual practice, we see that the wear on the flange helps derailment. Nadal's formula has some flaw as it does not take into account,

(i) The frictional resistance between the rail and the other wheel of the same axle.

(ii) The point of contact between the flange and the rail (see App. II)

Taking into account the frictional resistance of the opposite wheel, (fig. No. 5) we get,

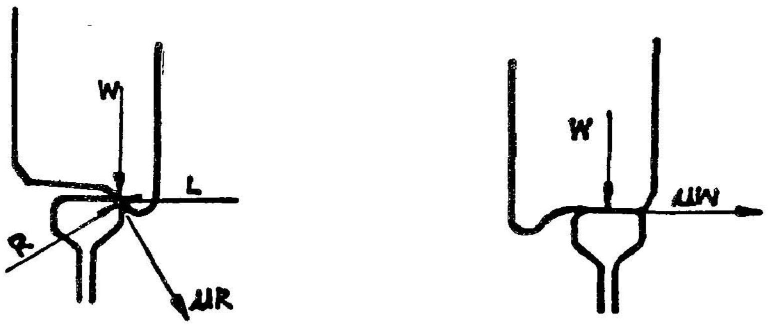

Fig. 5.

$$L (\cos \theta + U \sin \theta) \angle W \sin \theta (1 + U^2)$$

$$L \angle W \frac{\sin \theta (1 + U^2)}{\cos \theta + U \sin \theta} \qquad \ldots.(10)$$

for the values of θ as 45° and 75° the safe lateral load will be .85W and 2W respectively. Similarly the values for a trailing contact can be calculated.

Mr. Yukta Sato of Japanese Railways has introduced creep theory developed by Dr. Carter and has changed the original formula. The application of Mr. Sato's formula is restricted upto a stage before the actual slip occurs and after which Mr. Da Costa's formula equation (10) applies.

It will be seen from the foregoing analysis, that Mr. Nadal's formula errs on the safe side in so far as the safe lateral load is concerned and ensures more safety. Even in the case of a leading contact, as the safe lateral load increases with an increase in the value of θ, the wheel can sustain heavier lateral load before it can mount the rail table. The investigators in India who have imposed a limit on the safe lateral force upto 55% of the axle load, possibly want to guard against any lateral bodily movement of the track.

The formula developed for leading contact has also a discrepancy which has been discussed by Mr. Da Costa in "Riding of pacific locos". After the flange actually slips, the friction is reversed and instead of helping a derailment opposes it and, if L is not of sufficient magnitude the wheel will slip down again. This is the reason that even under the influence of relatively higher values of L than those given by the leading contact formula derailment does not normally occur.

It may be safely deduced from the above analysis that apart from Θ there is another factor L, the value of which depends upon Θ, which controls derailment. As an increase in the value of Θ raises the safe lateral force and also the value of L (a source of danger) a compromise in fixing its value is necessary.

OPTIMUM VALUE OF ANGLE Θ

As stated before, that the investigators in India have recommended a lateral force of 55% of the axle load as 'SAFE', the limits for the value of Θ may be so fixed as to enable the wheel to withstand a lateral force of at least equal to its instantaneous vertical load. In this respect the recommendations by Mr. Da Costa in his paper are reproduced below.

(i) The flange gauge face should not make an angle exceeding 30° with the vertical ($\Theta = 60°$). This is based on Nadals analysis which indicates that the flange with this angle can sustain lateral force almost equal to the instantaneous vertical load..........

(ii) The flange gauge face should make an angle of at least 15° with the vertical..........

(iii) It may be from the above that the value of Θ should lie between 60° and 75°

For the geomatrical lay out, drawing Nos. CSL 120 and 121 may be referred to.

APPENDIX - I

2a = Width of the track gauge at tread contacts.

2b = Wheel base of the vehicle

C = Total lateral clearance between frame and rail

D = Wave length of the sinous motion of an axle truck

D' = Wave length of the sinous motion of double axle truck

f = Creepage cœfficient

i = Coning of the tyre

K = Multiplying factor to determine the wave length of a four wheeled truck

L = Lateral force

l = Distance of an axle from the centre of friction

r = Radius of the wheel

R = Reaction at the rail

R_2 = Radious of the curve

U = Coefficient of friction

V = Critical speed (A speed when the energy input by the disturbing forces is equal to the energy dissipated by damping forces)

W = Vertical wheel load

w = Angular velocity of nozing oscillation

n = Angularity of the wheel at a time when the leading and trailing wheels are contacting outer rail

Y = Angle of swivel of wheel base, when the leading wheel maintains contact with the outer and training wheel shifts to inner rail.

X = Total angularity of the wheel base when the leading and trailing wheels are against the outer and inner rails respectively.

Θ = Angle which slope of the flange makes with horizontal

APPENDIX-II

Location of the point of contact between the flange and rail

The point of the flange rail contact can be located by plotting the wheel base on the track and finding the total angularity which the wheel makes with rail. The Total angularity can be determined by first finding out the total lateral clearance which comprises of,

(i) Clearance between the hub and horn including wear.

(ii) Clearance between the flange and rail including wear.

(iii) Gauge widening.

In fig. No. 6 below the wheel base of a locomotive is plotted on a curve, with the leading and trailing wheels against the outer rail.

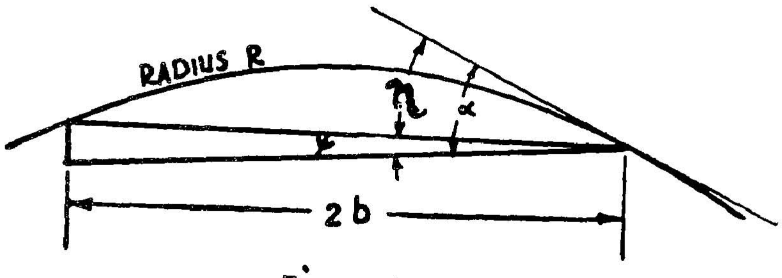

Fig-6

$$N = \frac{b}{R_2} \qquad .....(11)$$

If locomotive takes a position with the leading and railing wheels against the outer and inner rails respectively, then the angle of swivel

$$Y = \frac{C}{2b} \qquad ....(12)$$

Then

$$X = N + Y = \frac{b}{R_2} + \frac{C}{2b} \qquad ....(13)$$

In the figure below, for a given slope of flange: lateral clearance and wheel base, the flange rail contact is located. It will be seen that with any increase in the angularity resulting from the wear on the flange gauge face, this contact will move ahead of the axle centre. This analysis helps in determining the maximum wear that can be tolerated on the flange gauge face.

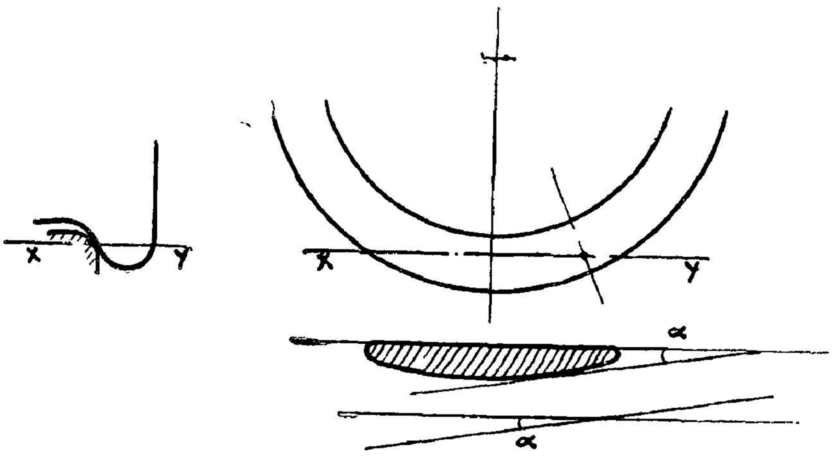

Fig—7

YOUR MAGAZINE

The Southern Railways Magazine offers you a variety of topics—short stories, pictures, historical, humorous articles, news, technical railway engineering in its various aspects every month. It only costs Rs. 3 per year. For Railway personnel Post-Free. Fill this in and become a subscriber to-day itself.

CUT HERE

Kindly enrol me as an annual subscriber from the month of

to ....195 .

Cheque enclosed Remittance despatched by M. O. (Strike out whichever is unnecessary)

Name .

Address

To

The Circulation Manager,

SOUTHERN RAILWAYS MAGAZINE,

Post Box 17,

TANJORE, (S. I.)

ELECTRIC TRAIN SERVICE

TWO NEW UNITS ADDED

WITH a view to tackling the rush during peak hours on the suburban service between Madras Beach and Tambaram, the Southern Railway authorities put on the line two Italian electric multi-unit trains on the Tamil New Year Day.

Mr. M. Bhaktavatsalam, Minister for Agriculture, who inaugurated these new trains, expressed the hope that the electrified train service in the State would be expanded and was confident that this expansion would become a *fait accompli* before long, seeing the interest taken by the Railway Ministry in this regard.

An order for six multi-unit trains had been placed with an Italian concern, the Breda Electro-mechanic Company of Milan, in 1953 and four have been received so far. Of these, two have been fitted up in the Car Workshop at Tambaram and work on the remaining two is proceeding fast apace and it is expected that these also will be put on the tracks in a month or two. Each of these new trains can carry 306 seated passengers (as against 196 carried by the trains at present). Each comprises four coaches (as against the three at present).

Mr. T. A. Joseph, General Manager, Southern Railway, disclosed that orders had been placed for another six multi-unit trains.

The Minister was received on arrival by Mr. T. A. Joseph, General Manager, and introduced to the officers and Heads of Departments of the Railway. Amongst those present were Dr. T. Lombardozzi, Commercial Counsellor, Italian Embassy, New Delhi, Dr. Dagostini of Messrs. Finmeccanica, Rome and Dr. C. de Capitani of Messrs. Breda, Milan.

Mr. R D. Walter, the Electrical Engineer of the then South Indian Railway who was in charge of the electrification of the suburban service in 1931 and who is now in private service, was also present.

Mr. T. A. Joseph welcoming the gathering recalled that three years ago, the centenary of the Indian Railways had been celebrated throughout the country. He said 1956 happened to be the centenary of the opening of the first stretch of line between Madras-Royapuram and Wallajah Road (1856). Also, this year happened to be of special interest, being the silver jubilee year of the opening of the suburban electric railway system.

On that occasion, 25 years ago they had made a beginning with 17 electric units and 90 train services a day. At that time, they carried 3.3 million passengers per annum. In the 30's they added seven electrical units to the service but during the war years, they were not able to add any more. But there had been a rapid growth in the number of passengers travelling by the suburban service and to-day, 31 million passengers were carried per annum while the frequency of train services was around 200. Though they now carried ten times the number of passengers carried in the beginning, there was, during peak hours, a large amount of overcrowding. He hoped the new train units would go a long way towards reducing the overcrowding.

Of the six Italian multiple units for which orders had been placed in 1953, four had been received now and the remaining two were expected within the next ten weeks. As replacement for some of the old units, they had placed orders for further six new units.

Mr. M. Bhaktavatsalam, inaugurating the train service extended cordial greetings to the officers, the staff and the thousands of workers of the railways on the occasion of the new Tamil Year. He hoped that even as they commenced the new year with the addition of these fine coaches, the new year would mean considerable expansion by way of services to the travelling public.

The Minister and the guests then boarded the gaily decorated train and had a 25-minute-run to Guindy where light refreshments were served. On the return journey, they travelled by a second train which had been waiting at Guindy. As soon as this train reached the Beach station, it joined the regular daily service with a run to Tambaram.

The coaches have comfortable seats with revolving overhead fans and adequate lighting arrangements, for both I and III classes. In addition, the first class coaches are well upholstered.

Dr. De Capitani of the Breda Electro Mechanic Company of Milan said that the electric motor was of 165 h. p. and each coach had eight electric fans. The maximum speed was 60 miles per hour.

Each multi-unit train has a seating capacity for 252 third class passengers, 28 women, and 26 first class passengers. An equal number of standing passengers can be carried during rush hours, it was stated.

A notice found in the coaches amongst other things warns passengers against accepting drink, food or tobacco from strangers as these might be doped.

A MASSIVE YANKEE CYLINDER MOVES

YET another massive steel 'monster' has been carried by the Eastern Railway from the Calcutta Docks to Dehri-on-Sone for the expansion of the paper industry there. This is the second movement of a heavy extra ordinary size consignment to the same destination within a month, the previous one being that of the 31-ton 'Kiln Shell' of similar dimensions carried on eleventh of last month.

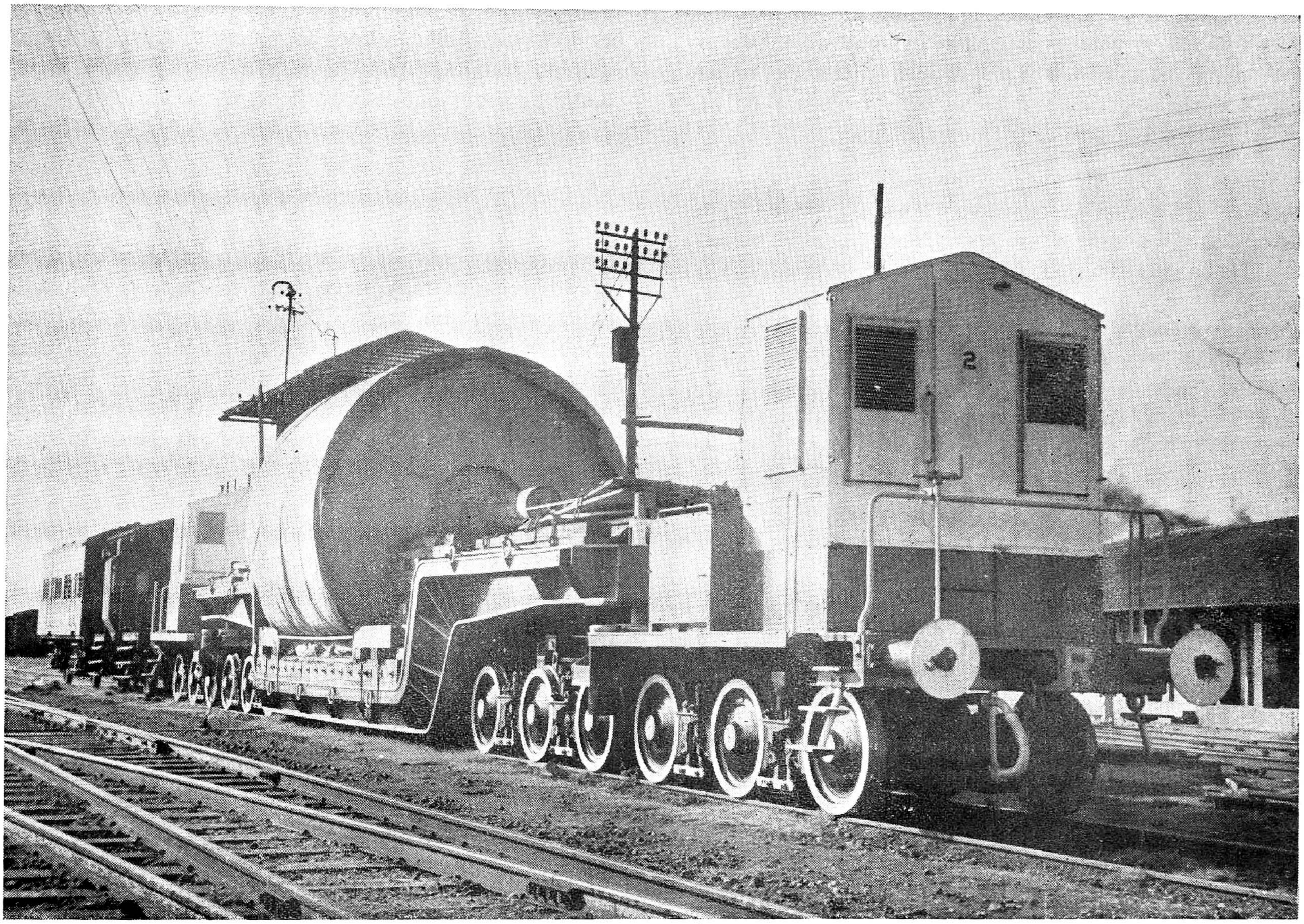

A massive yankee cylinder moves.

The 'monster' is an Yankee Cylinder 21′-9″ long with a 13′-9″ dia. The machine weighs 50 tons.

Loaded on the Railway's 130-ton well-wagon the only one in India—the out-size consignment left the East Docks Junction by a special train on its nine-day 450-mile detour run to Dehri-on-Sone.

The load which allows at places minimum clearances of $1\frac{1}{2}''$ in height and $1\frac{1}{4}''$ on either side is being transported under the supervision of a party of railway transportation and engineering staff.

Elaborate prior planning has been made for the load to move during daylight only and for the safety of all passenger and goods trains which may cross the special on the run.

The first Yankee Cylinder was moved by the Eastern Railway to Dehri-on-Sone in July, 1953.

PORTABLE ELECTRIC TOOLS

By F. W. Hughes, M.A.S.E.E. ★

THE practice of 'bringing the tool to the job' has rapidly increased the usage of portable electric tools in industry. Moreover as such tools have been developed for industrial applications, they have also been applied by garages as well as in small workshops by the home craftsman. This article, therefore, offers advice in the selection and use of such tools not only to the industrial but also to the domestic user.

There are a number of factors that should be considered in determining the best model of portable electric tool for a specific job. Before purchasing a tool, it should be examined in regard to its weight, spindle speed, suitability of shape, safety features and ease of maintenance. A tool may be favoured because of its light-weight, yet it may not have a motor powerful enough for the job in hand, since tool weight and motor horsepower are generally roughly proportional. At the same time, it is slow and uneconomical to use a heavy tool when a light tool can do the job equally well.

The spindle speed of a portable tool is usually established to suit its application. If the speed is too high in relation to horsepower, the tool may stall in operation. But a tool of the same horsepower with a lower speed has more torque and is less apt to stall. For proper application to the job, it is considered by the present writer that the relationship should be such that the speed under load can drop off to between two-thirds and one-half of the no-load speed.

A large tool with a low speed will, of course, have ample torque to drive a small cutter, but at a rate that is too slow to give a satisfactory output. Thus, there are the two extreme conditions, firstly, a speed too high for a motor that is not strong enough, so that the tool stalls and, secondly, a motor strong enough but too slow, so that time is wasted.

Proper cutting speeds must also be considered in determining spindle speed. If spindle speed is excessive and the motor of the tool strong enough to sustain the speed under lead, the cutter will burn. A tool with a lower spindle speed and possibly a less powerful motor is indicated for this situation.

No-load spindle speeds recommended for various sizes of portable electric drills are indicated in Table I. The speeds given are for drilling mild steel. For soft materials, such as aluminium, these speeds can be practically doubled. For harder or tougher materials, such as stainless steel or Monel metal, these speeds should be about one-half of those given.

TYPE OF HANDLE

The smaller portable electric tools, such as drills and screwdriver generally have a pistol-grip-type handle. This permits the tool to be held securely and comfortably with one hand. For medium-sized tools, where there is more over-hung weight, a closed end handle is better. An auxiliary side handle on low-speed high-torque models lets the operator use both hands to resist any tendency of the tool body to turn. On the larger drills and screwdrivers, side handles or pipe handles (usually located opposite the switch handle) are essential to give the operator good control over the tool.

Closed handles afford the best control for portable saws. For grinders and right angle sanders, straight end handles are preferred. The sanders preferably have an auxiliary side handle at the spindle end.

ELECTRIC CABLE

Every tool should have a suitable motor switch, conveniently located. This switch is generally of the instant-release type. On tools like drills, screwdrivers and tappers, the switch can have a pin for locking it in the 'on' position. But on tools with cutting blades, like saws, there should be no arrangement for locking the switch 'on' so as to product the operator. Still other tools, like grinders and sanders, are equipped with plunger or toggle switches. It is important that all switches be located and protected so as to avoid accidental operation.

Even if the tool is designed for light service, it should have a substantial cable of sufficient size to carry the full load current to the motor. Where an extension cable is

★ *Sales Research Engineer, Black & Decker Ltd., Harmondsworth, Middlesex, England.*

needed, this should be substantial enough to carry the current without too much loss in line voltage. Lighting flex should *never* be used for electric tools.

In Table II are shown wire sizes for various ampere capacities and wire lengths for 220 volt tools. These figures actually represent the wire section necessary and this cross sectional area may be made up of the requisite number of wires of any smaller diameter. Data are based on a current equivalent to 150 per cent of the full load with a loss in voltage of not over 5 volts. For 115 volt tools, the wire size indicated for twice the cable length required should be used. The words under the size represent the recommended insulation.

The Motors of portable electric tools are normally designed to operate satisfactorily with a variation in their nominal voltage of up to 6 per cent. Any greater variation has a pronounced effect on the motor performance. A 10 per cent drop in voltage reduces the power of the motor about 20 per cent and the speed of the operation at full load falls off considerably.

The necessity for using the proper rating of cable is obvious. On the other hand, with an increase in voltage, motor speed increases as well, with the possibility that the motor will overheat if operated over an extended period.

EARTHING

All British electric tools to-day are supplied with a three-core cable. The third wire, having green-coloured insulation, is for earthing. One end of the earth wire is connected to the tool housing and the other end should be connected to a good earth contact, such as a water pipe, conduit or copper rod driven into the earth. Earthing is particularly important when tools are being used in a damp area or inside of a tank, or on metal structures that are themselves earthed. The earthing connection should always be made *before* the current supply connection is made.

Some wiring systems are supplied with three-pole earthed socket, in which case the cable can be equipped with a three-pole plug. The prong to which the earth wire is connected is longer than the two other prongs, so that an earth is automatically made before the current can flow through the power wires.

CARING FOR THE TOOL

With few exceptions, the gears in portable electric tools are grease lubricated. The lubricant will remain in the gearbox for quite a long time. When it becomes necessary to replace it, all the old grease should be removed and the box thoroughly cleaned. A grade of grease recommended by the manufacturer of the tools should be used. Care should be taken not to fill the gearbox more than one-half to two-thirds of its capacity.

Ball bearings in tools so equipped are usually permanently sealed. They should never be put in cleaning fluid, as this removes the grease, which cannot then be replenished. If the tool has sleeve bearings, they are usually self-lubricating. Other sleeve bearings can be oiled through a ball valve on the tool.

TABLE I

No-load spindle speeds for portable electric drills

Drill Capacity in inches	No-load spindle speed, r. p. m.
$\frac{1}{4}$	1,700 to 2,500
$\frac{3}{8}$	600 to 900
$\frac{1}{2}$	400 to 650
$\frac{5}{8}$	350 to 550
$\frac{3}{4}$	300 to 450
$\frac{7}{8}$	250 to 375
1	225 to 350

ANNOUNCEMENT

We have pleasure in announcing to all Advertisers and Subscribers that we are issuing a special Engineering Supplement along with our July 1956 issue.

EDITOR

TABLE II

Size of extension cable for portable electric tools
(Based on current equivalent to 150% full load of tool and a voltage drop of approximately 5 volts)

Name Plate Rating of Tool in Amps	0 to 2.0	2.1 to 3.4	3.5 to 5.0	5.1 to 7.0	7.1 to 10.0
Distance in Feet	Wire Sizes (S.W.G.)				
25	20 3 core thin	20 standard	18 standard	18 standard	16 standard
50	20 3 core thin	20 standard	18 standard	18 standard	16 standard
75	20 standard	18 standard	18 standard	18 standard	16 standard
100	20 standard	18 standard	18 standard	16 standard	16 standard
200	18 standard	18 standard	16 standard	16 standard	— standard
300	18 standard	16 standard	16 standard	—	—

Note : If voltage is already low at the source, have voltage increased to standard, or use a much larger cable than listed in order to prevent any further loss in voltage.

Brushes are readily removed for inspection. If worn to less than about ¼ in. length, they should be replaced; otherwise the motor will are badly and damage the commutator. If the commutator shows roughness, it can be smoothed with fine sandpaper. A smooth, dark brush track on the commutator is normal.

The switch should operate freely. There should be no likelihood of it sticking in the 'on' position with the possibility of causing an accident. The cable connections with the switch and plug should be tight. If the cable is worn it should be replaced with another of the same size.

SPECIAL FEATURES OF TOOLS

Portable electric screwdrivers usually contain a clutch that disengages the drive when the screw (or nut) has been tightened sufficiently. There are three general type of these tool. In one type, there is a positive clutch, enabling the operator to control the release of the driving torque by the pressure he applies. This screwdriver is ideal for driving for wood screws, where torque increases constantly and varies widely. It is not recommended for use in metal assemblies, unless by experienced operators, since the sudden increase in torque when the screw is tightened can cause damage and injury.

In the second type, the clutch of the screwdriver is adjustable. Here the release of the driving torque is not controlled by the pressure applied by the operator but by a change in tension of a spring against which a jaw of the clutch operates. Once the value of torque is set, it remains fairly constant until the jaws of the clutch wear appreciably. This type of clutch is preferred to a positive clutch for driving machine screws and fasteners in metal assembly work.

The third type of screwdriver, the impact wrench, employs a driving torque releasing mechanism that is not controlled by the pressure applied to the tool or by spring tension. Its construction is such that there is practically no torque reaction transmitted to the operator. Tool size must be carefully chosen to suit the work, because the impact can create stress beyond the elastic limit of the fastening device.

Portable electric grinders have an elongated gear housing which can be grasped by the operator's hand. The grinding wheel is mounted directly on the end of the spindle. If the tool is inadvertently dropped or hit against an object so as to damage and possibly crack the wheel, there is the danger of having the wheel fly apart. Before using a wheel, it should be examined for cracks by being sounded with a solid piece of wood, such as a hammer handle.

A maximum surface speed of 6,000 ft. per minute should be observed for the general run of vitrified wheels. Special bonded wheels can run at a higher speed and require separate consideration. A quick way to check the

surface speed (in ft./min.) is to multiply one-fourth of the wheel diameter in inches by the speed of the spindle in revolutions per minute. For protection, the operator should always wear goggles and a suitable guard over the grinding wheel is mandatory.

Electric saws are usually equipped with a lower guard that recesses into the upper guard as the tool enters the cut and springs back over the exposed portion of the blade after the tool completes the cut. If the lower guard ever sticks and fails to spring back, the saw should be disconnected from the power source before any attempt is made to rectify the condition.

Unless portable electric tools are fitted with explosion-proof motors, they should never be used where there are inflammable dusts are vapours, because of the arcing between the brush and the commutator. Tools subjected to an excessive amount of moisture should be disassembled, cleaned and baked dry. Otherwise the motor is likely to be earthed, thus endangering the operator.

Table III shows some of the most common causes of portable tool failure together with suggested means of correction.

TABLE III

Possible causes of trouble in portable electric tools

Fault	Check for	Remedy
New tool, motor does not operate	Brush stuck in holder, not making contact with commutator	Remove burr from brush holder
	Poor contact at the socket	Replace plug
	Broken conductor in cable	Cut off broken end or install new cable
Tool has been in service, but motor does not operate. Takes no current	Worn out brushes	Replace brushes, preferably by those recommended by tool manufacture
	Switch not making contact	Replace complete switch mechanism
	Open circuit in field coil	Rewind or replace field coil
	Two or more open coils in armature	Rewind or replace armature
Motor hums and takes heavy current, but does not operate	Short circuit in field coil	Rewind or replace field coil
Motor operates abnormally. Slow, jerkey excessive sparking at commutator, runs hot	Short circuit in armature. Charred insulation may give location of short circuit. Solder may be thrown from connections to commutator bars effected	Rewind or replace armature. *Note:* An accumulation of dirt with carbon and metallic particles between commutator bars can cause a short acircuit
Motor operates at excessive speed, gives poor operating performance	Partial short circuit in field coil	Rewind or replace field coil
Ring of fire visible around the commutator	Open circuit in armature	Rewind or replace armature
Motor overheats, solder thrown from connections to commutator bars	Overload voltage too low	Use heavier extension cable
	Dull cutter, requiring heavy pressure	Sharpen cutter
	Motor ventilation poor	Clean vent holes of motor housing
Operator gets shock	Earthing wire not connected	Connect earth wire
	Carbon and metallic dust on brush holder insulation	Clean brush holder insulation

DEVELOPMENT AND DESIGN OF MACHINE TOOLS IN INDIA

By R. Koban, Chief Designer, Machine Tool Prototype Factory, Ambarnath.

In this country with its size and large population, it is undoubtedly obvious that Industrial expansion is a necessity and, to accomplish this industrial expansion, Machine Tools of many types are required. As the Industries improve, so must the accuracy, speed and the automation of various machine tools, in a similar proportion. For, the results are controlled by the Machine Tool or apparatus which does the work.

Far-seeing and wise Industrialists in India have already commenced the manufacture of many types of Machine Tools and the Government of the country have likewise seen its necessity and thus in different parts of the country have sprung up reliable and well-organised Factories for the production of immediate requirements and future necessities. The demand, however, at the present time is more than the supply and consequently imports are necessary; thus the economy of the country has, to a certain extent been restricted. Therefore, the Factories have a task before them of rapid but always excellent production, to ensure stabilization of the country's industrial future. The Machine Tool Prototype Factory in Ambarnath has been set up by the Government with a view to design, develop and manufacture a variety of Machine Tools to cover the needs of Ordnance Factories, for the Defence Services and other Government departments in the first instance: and, likewise, as they are to cover the higher precision or automatic types of Machine Tools, the surplus capacity will be directed towards supplying civil trade.

The establishment of a Machine Tool Design Office was a definite necessity and this Factory can be considered as having the first, and original, design team in India and it is proud of the fact that the Indian Designers and staff have reached a stage where they can work independently on the design of any type of Machine Tool.

The establishment of the designs and Production of the Factory was by a graduated process to ensure efficiency and experience and, design and manufacture of various tool-grinders, polishing machines, monodrive (gear-box adaption for old types of lathes), Precision tool room lathes, Hydraulic Surface Grinders and 1/2"

1 Handle for change of Spindle Speed.
2 Push Button starter for main motor.
3 Push button starter for coolant pump motor.
4 Pole changing switch for 2 speed motor.
5 Turret Slide.
6 Cross Slide.
7 Lever for operating the Collet.
8 Automatic bar feed arrangement.

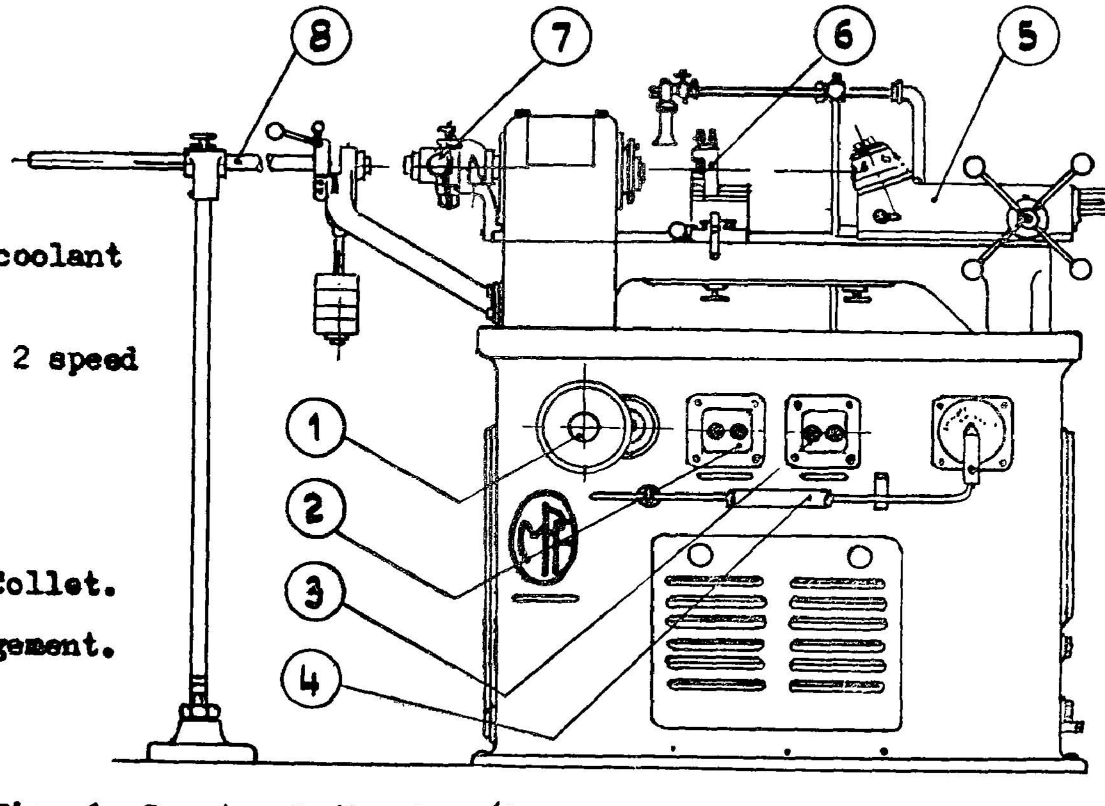

Fig. 1. Capstan Lathe CL 1/2.

from strength to strength

in steel

FRAMED IN STRENGTH OF STEEL BUILT FOR ENDURING SERVICE

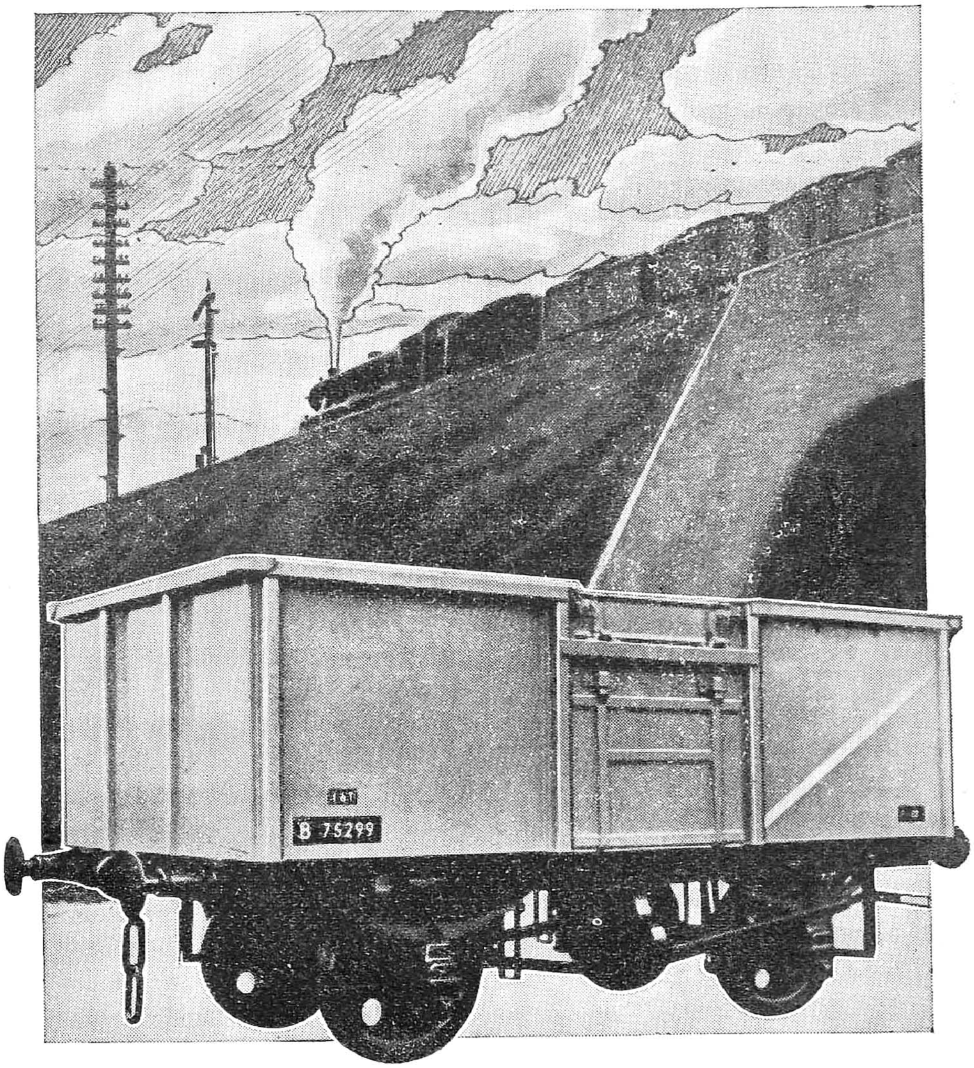

FRAMED IN STRENGTH OF STEEL BUILT FOR ENDURING SERVICE

For enduring service . . . the strength of steel. For design and construction, sound, steadfast and reliable . . . the immense facilities, the engineering experience, the craftsmanship of Pressed Steel Company Limited. Strength added to strength . . . reason enough why over 11,000 of these 16-ton mineral wagons will be Pressed Steel built to the order of British Railways annually. *Pressed Steel Company Limited also manufacture wagons and rolling stock for world railways.*

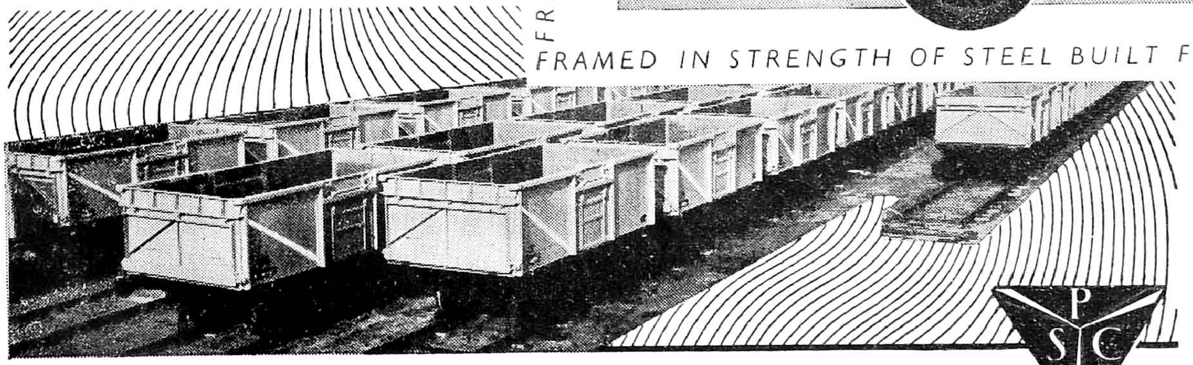

RAILWAY DIVISION, PAISLEY, SCOTLAND

HEAD OFFICE COWLEY, OXFORD

wagons and rolling stock by **PRESSED STEEL COMPANY LIMITED**

London Office: Sceptre House, 169 Regent Street, W.1.

Capstan Lathes have been established. The Prototype of 1¼" Capstan lathe and the design of 2" Capstan Lathe is at present in hand, and these machines are designed following the present trends of automation in Machine Tools by incorporating pre-selective spindle speeds, feeds and programme setting. By keeping to the modern trend in the manufacture of Machine Tools the Factory authorities are hoping to contribute to attaining self-sufficiency of the Indian Machine Tool Manufacturer.

With the old type of Capstan Lathe; which invariably has an unwieldly setting and manipulation,— it was rarely considered an economical Machine Tool unless the members required from it were in the region of hundreds; as the setting time required to ensure a semi-skilled worker to do the work could not be compensated unless the numbers were large. But the modern machine with its easy speed changes, its standardized tool boxes and tools and easy application, can be set so quickly that even pieces of 20 and upwards are easily and economically manufactured.

A Capstan Lathe 1/2" is at present undergoing rigid test in the test branch of the Machine Tool Prototype Factory, Ambarnath. The following main characteristics of the Capstan Lathe, type CL 1/2" (Fig. 1) are given.

The most striking feature of the CL. 1/2 is the absence of any gears for the main drive. The range of spindle speeds is from 300 to 3000 r.p.m. infinitely variable. By having the main drive of infinitely variable speed, it is always possible to obtain the optimum cutting speed for the job in hand and also achieve the most economical chip removal. Due to the wide range of spindle speeds, the machine is ideally suited for the machining of ferrous, light metal and plastic materials for Bar and Chucking work. The pedestal and chip tray are cast in one piece and 'house' the main drive, coolant pump tank, and the electrical equipment. The bed was designed in such a way that the maximum resistance against torsion is obtained. The sturdy head stock and the mounting of the heat treated and ground and dynamically balanced main spindle with American Spindle Nose No. 4, Type A2 in high precision taper roller bearings guarantee the sustained and continuous accuracy of working. The turret saddle can be clamped in the desired position by means of two eccentric clamps. The turret slide has a useful stroke of 2½" and carries the turret head with six tool stations with standard ¾" mounting holes. The turret head is automatically indexed and rigidly locked in position. The indexing of the turret head is automatically accomplished through the return stroke of the turret slide actuated by hand over star wheel, pinion and rack. The tool stops, which are adjustable in the longitudinal direction, are indexed at the same time as the turret and thus ensure perfect similarity of cutting lengths on every component. The cross slide movement is actuated by a conveniently adjusted lever and the slide carries two tool posts one in front and one at the back on which form tools can be set as well as a parting tool for accurate forming as the tool stroke can be set over an adjustable stop.

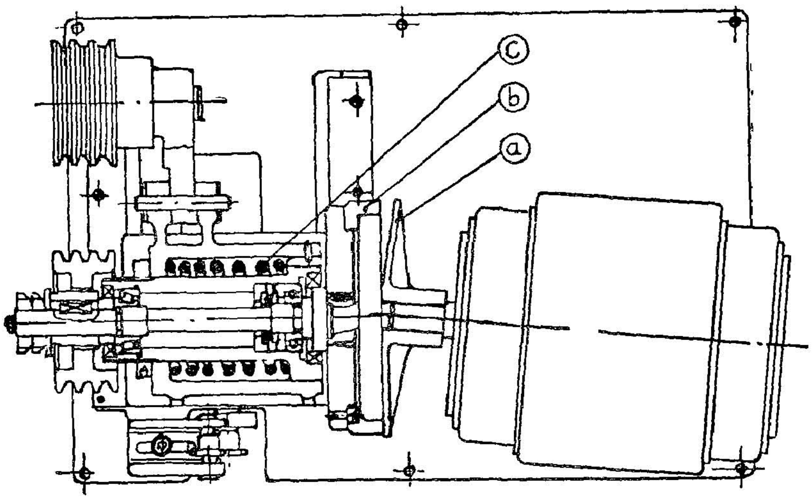

Fig. 2 : Variable Speed Main Drive.

The infinitely variable main drive unit (Fig. 2) consists of a two speed motor of indigenous manufacture with 1400/2800 r.p.m. and 1.1/1.5 H.P. On the motor shaft a cast iron cone disc (a) is mounted, which is in contact with a friction disc (b) of laminated bakelite. The necessary contact pressure is obtained through a compression spring (c). Through the variation of the radius of contact the speed variation in the ratio 1 to 5 is achieved. The necessary movement of the unit, housing and friction disc, is effected over screw and nut which are freely operated by a hand wheel and a chain. The hand wheel is connected over gears with a graduated dial indicating the speed. The main spindle is driven by means of 3 link type 'V' belts from the floating driving pulley of the friction wheel unit. By designing the driving pulley floating, this ensures that the spindle pulley, and the main spindle is not subject to additional thrust due to misalignment, which might have arisen as the friction disc goes forward to take up the wear as indicated in Fig. 3 below:—

The jockey pulley mounted on the friction wheel unit takes up the slackness which may arise due to movement of friction wheel unit for speed adjustment and also

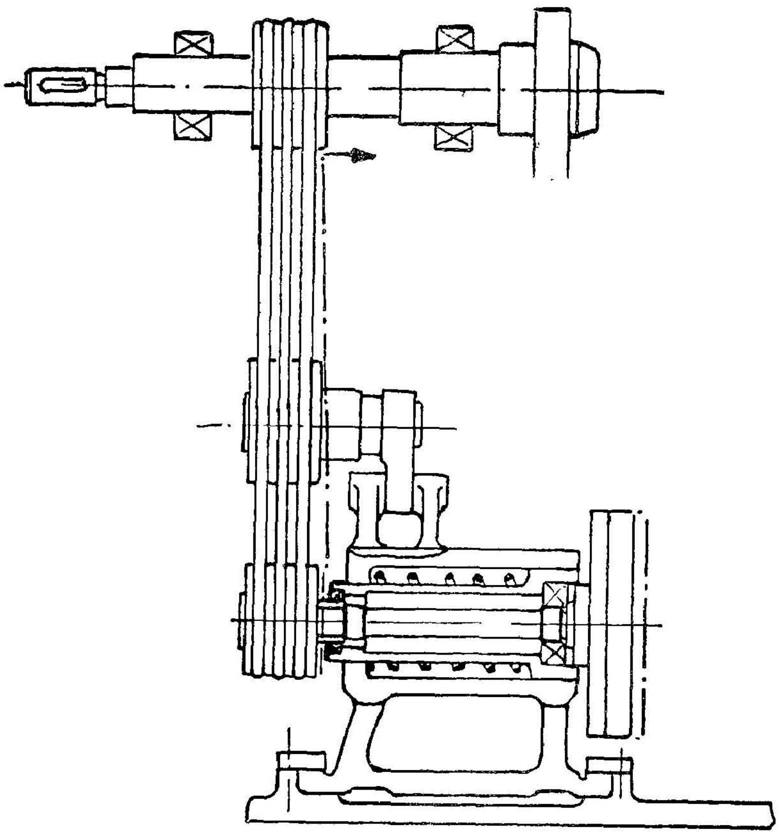

Fig. 3.

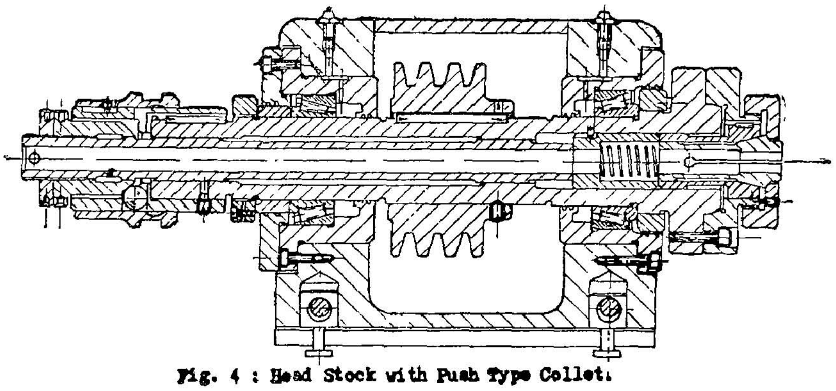

Fig. 4 : Head Stock with Push Type Collet.

guarantees the alignment of the driving pulley with main spindle pulley. This type of variable drive is suitable for transmission of power upto 3 H.P. and covering upto a maximum speed ratio of 1 to 5.

The machine is supplied with the following standard equipment:—

Collet attachment of push type which is operated by a conveniently arranged lever on the end of the head stock (Fig. 4).

Automatically fed bar feed arrangement and the following tool holders:—

Adjustable stop Knee tool holder, Centre tool holder, Releasing die holder, Releasing tap holder, Adjustable tool holder, Box holder.

The following extra equipment can be supplied a extra cost.

Collet of double gripping type suitable for the push type collet attachment (Fig. 5).

Draw in type collet attachment (Fig. 6) with a full range of collets.

Thread chasing attachment (Fig. 7) for the cutting of threads upto a length of 2″, likewise adaptable for taper screw cutting. A standard range of leaders and nuts for 5, 6, 8, 10, 12, 14, 15, 16, 18, 20, 24, 28, 30 and 42 T. P. I., R. H. are readily available. The supply of

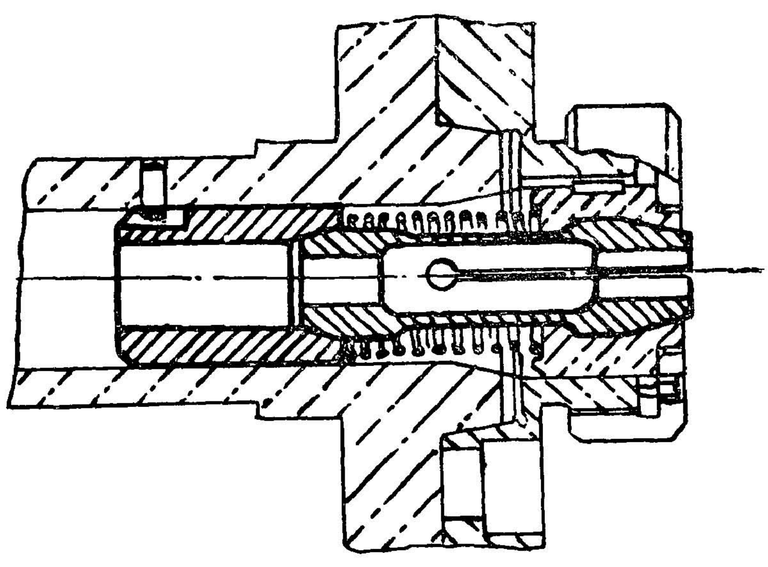

Fig. 5 : Double Gripping Type.

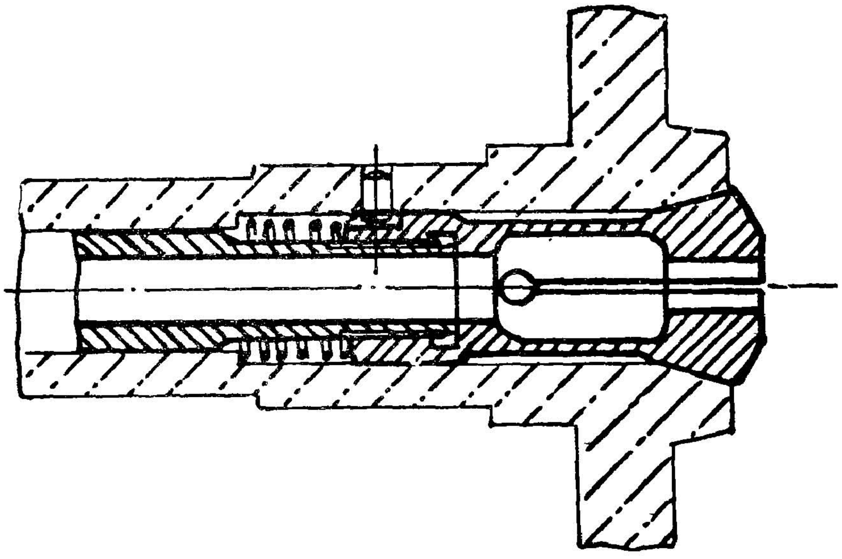

Fig. 6 : Draw in Type.

leaders and nuts for L. H. and any special pitch sizes can be arranged if demanded.

The $\frac{1}{2}$" Capstan Lathe can be easily converted into a centre lathe by replacing the cross slide and turret by a compound slide and a tailstock respectively. This so converted lathe is called a Cabinet Lathe (Fig. 8) of $4\frac{1}{2}$" height of centres and admits between centres 17". The cross slide and compound slide movement are $3\frac{1}{2}$" and the movement of the tail stock sleeve is 4".

The above is a description of one of the notable machines designed and produced by the Machine Tool Prototype Factory, Ambarnath. Its sturdy, efficient, accurate and modern design recommends it to any production engineer.

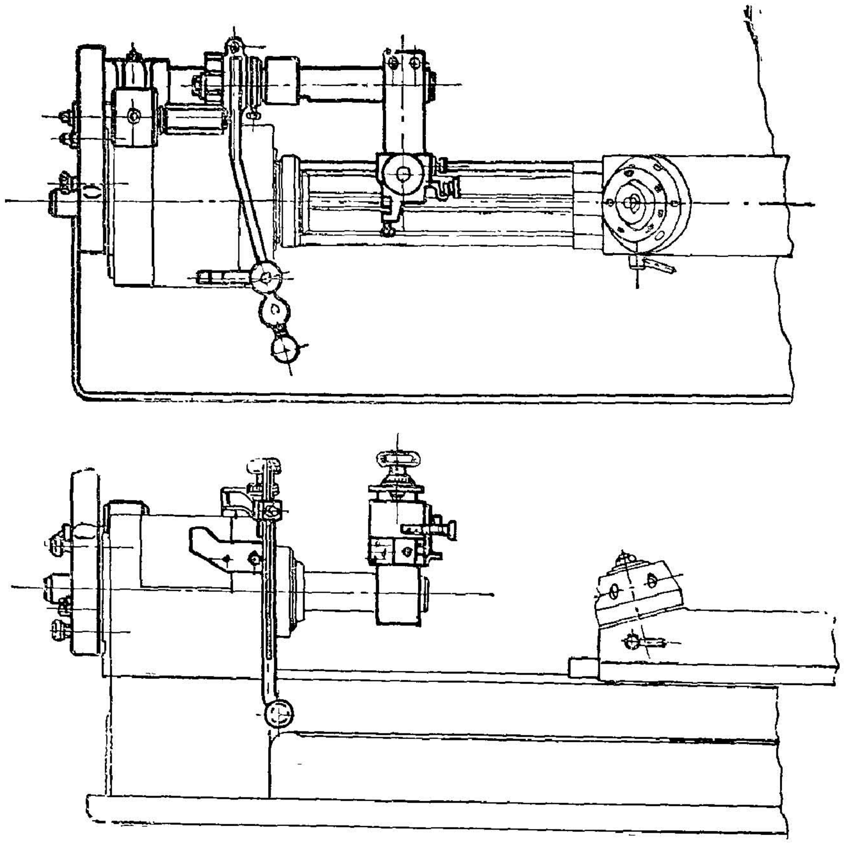

Fig. 7 : Thread Chasing Attachment.

1 Handle for change of Spindle Speed.

2 Push Button starter for main motor.

3 Push button starter for coolant pump motor.

4. Pole changing switch for 2 speed motor.

5. Tail Stock.

6 Compound Slide.

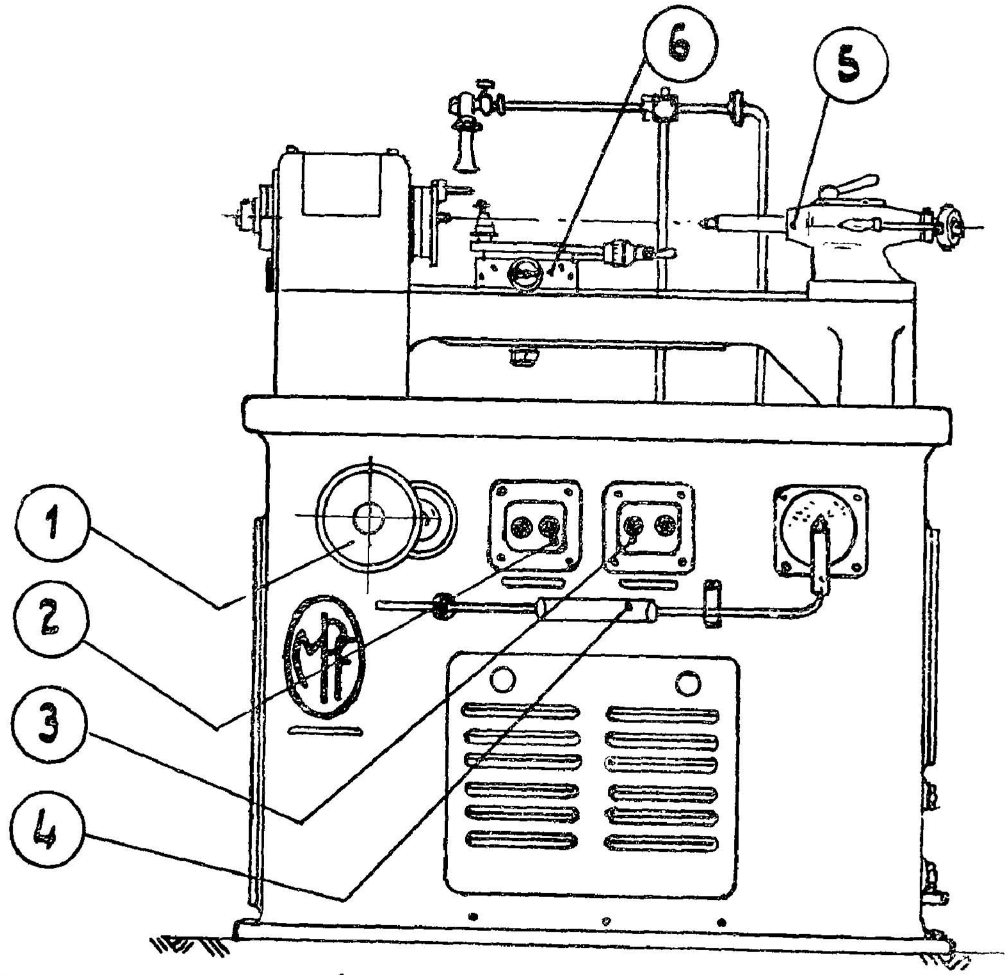

Fig. 8 : Cabinet Lathe - CBL - 4-1/2".

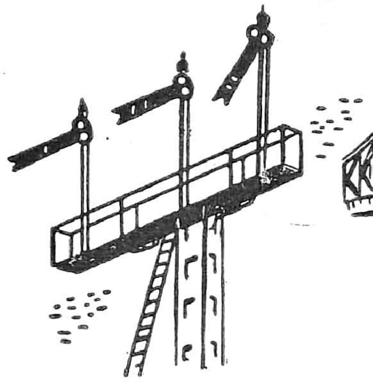
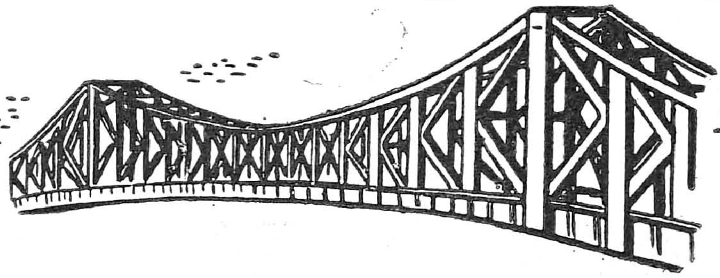
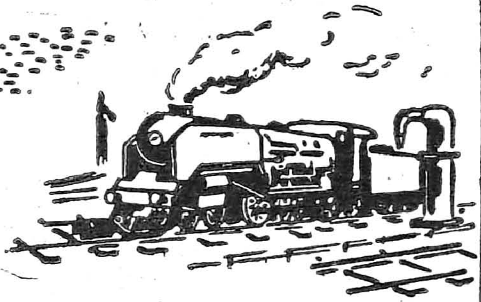

General Managers, Chief Mechanical Engineers, Chief Engineers.

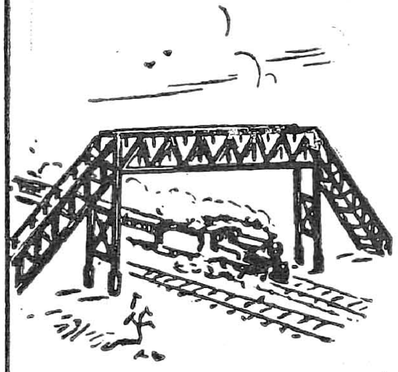

We can help you in your painting problems to SAVE TIME-SAVE LABOUR-SAVE COSTS and reduce large losses from CORROSION, frequent SHOPPING HOURS, etc, by using quality paints and labour-saving devices.

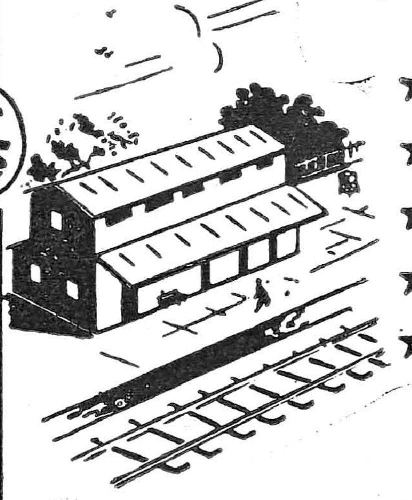
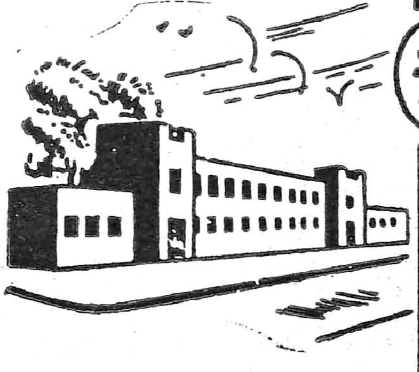

- ★ **PROTECTION OF STEEL WORK.**
- ★ **PROTECTION OF WOOD WORK.**
- ★ **PROTECTION OF ROLLING STOCK.**
- ★ **PROTECTION OF BUILDINGS.**
- ★ **PROTECTION OF UNDERWATER STRUCTURES.**

We are at your service to give you FREE technical advice on each and every painting problem.

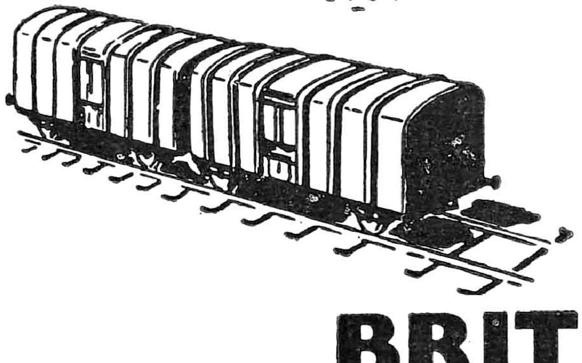

BPI

BRITISH PAINTS

(INDIA) LIMITED

32, Chowringhee Road, Calcutta-16.

A MONSTER MACHINE MOVES

LAST month a special train with a 50-ton wagon left the Calcutta Docks under the supervision of a party of railway transportation and engineering staff on its nine-day journey to a cement factory at Dehri-on-Sone. The special carried an imported 'Kiln Shell'—that measured 15′–7″ in its overall height from the rail-level after loading, and was about 22′ long with 13′–9″ dia. Its weight was 31 tons.

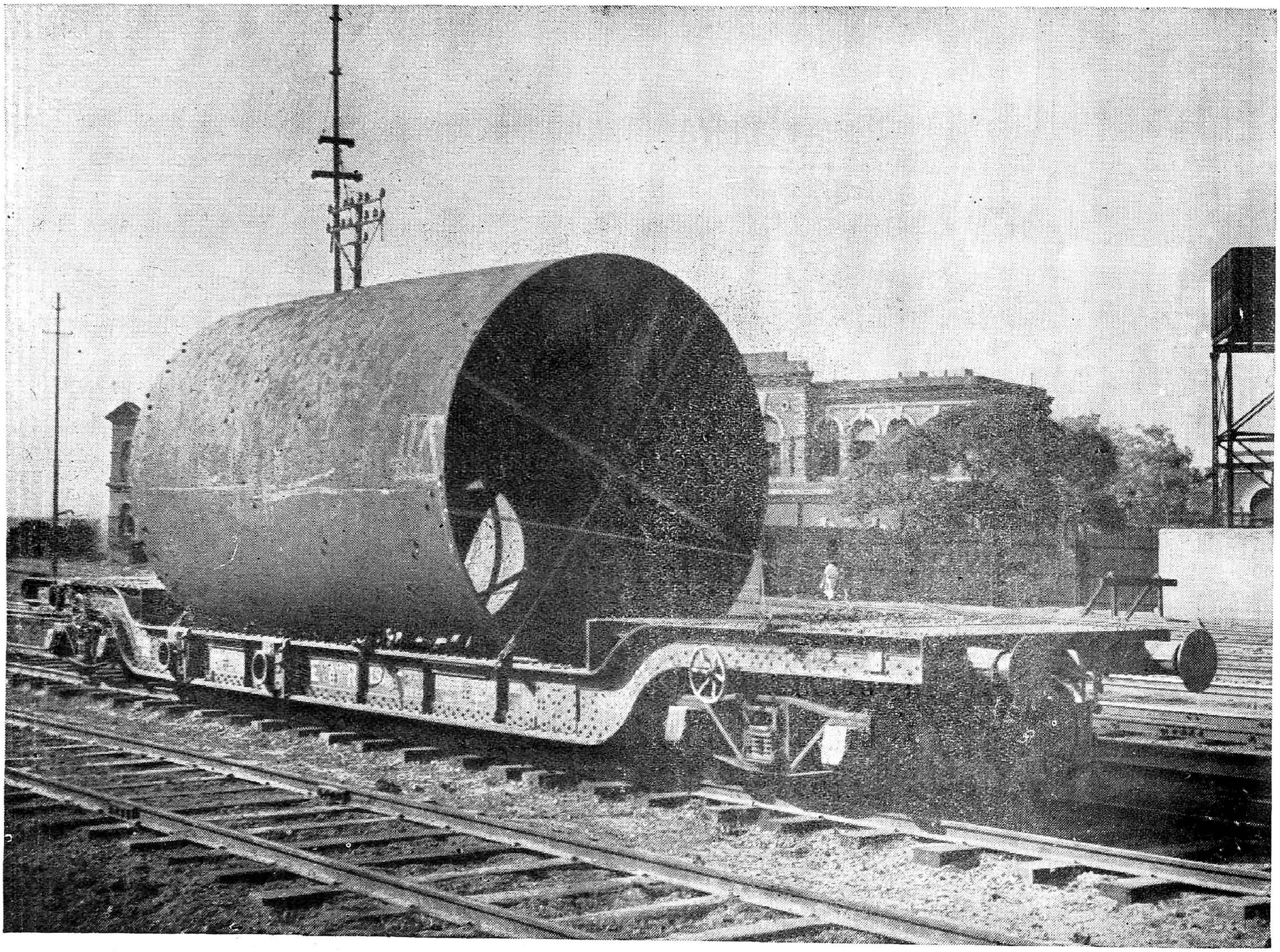

The bulk of the consignment posed difficult transportation problems for the Eastern Railway as the load allowed at places hairbreadth clearance from overhead and side structures.

Elaborate prior planning was done for the load to move during daylight only. Precautionary measures have been taken all along the route for the safety of the goods and passenger trains.

All goods trains have been ordered away from the tracks adjacent to that occupied by the special and suitable alterations made in the running schedule of a number of goods, passenger and suburban trains to avoid their crossing the load on its run. Warning has been issued to all stations on the way to keep the edges of the passenger platforms clear of waiting passengers and their luggage at the time when the special is expected to pass by them.

RAILWAY WEEK SUPPLEMENT

THE ROLE OF ENGINEERS ON RAILWAYS

By Shri M. Ganapati, General Manager, Western Railway

ON the occasion of the celebration of the Railway Week, I have chosen to address the listeners on the role of engineers on railways. Indeed, the part played by the engineer, both in the construction of railways and in their maintenance, is a very fascinating one.

On railways the term "engineer" applies to the civil engineer as apart from the mechanical engineer, the electrical engineer and the signals and telecommunication engineer. This may perhaps be due to the fact that the civil engineer who is responsible for the very construction of the railways from the time it is conceived till the time the railway line is established for the purpose of running trains, is first in the field in connection with any railway project. It is over a century now since railways were first constructed in our country, and the civil engineer has held the field throughout as an indispensable component of any railway organisation. On him devolves the responsibility of undertaking the survey, both preliminary and final, of any railway project, the eventual construction of the railway line in question and its ultimate maintenance for the running of trains both passenger and goods. On him also devolves the responsibility of designing, constructing and maintaining other civil engineering works connected with the railway undertaking, namely, station buildings, goods sheds, staff quarters, bridges, both minor and major, roads, buildings and offices, water supply and sanitary arrangements, including social amenity centres, such as institutes, clubs, schools for children, dispensaries, hospitals and the like at stations and colonies, whether they be in the sub-district, district, divisional or regional or general headquarters. He is also responsible for the construction and maintenance of running sheds, workshops both small and big for the maintenance of rolling stock, such as locomotives, carriages and wagons and workshops for the ordinary maintenance of civil engineering works at various stations. The construction and maintenance of store depots at suitable sites as well as in the headquarters of railways is also his charge. Structures for power houses or substations and connected civil engineering works are also his charge. In short, he provides and maintains the wherewithal for the Operating, commercial, Mechanical, Electrical Stores and Medical departments, etc., of railways. No one can, therefore, deny him the pride of place in the railway organisation. He is verily the creator of assets as far as the railways are concerned.

Shri M. Ganapati.

His task in these diverse fields is by no means an easy one. Beginning with the survey of a projected railway line he is faced with the problem of selecting the most

suitable alignment for the projected railway line between the two stations selected by the authorities and for this purpose he has first to study the contour plans of the Survey Department of the area in question, decide upon the approximate alignment depending upon the important places which have to be touched along the proposed route, make first a reconnaissance survey to determine the most suitable alignment and then proceed with the actual survey of the country to be traversed. What might appear on the contour plan to be an easy connection between two points touching important places may not actually prove to be quite so feasible on the ground on account of geographical conditions and only a careful survey of such geographical conditions such as the existence of rivers, canals, mountains, hillocks, valleys and other such barriers, will reveal the feasibility or otherwise of an easy connection consistent with practicable gradients which can be economically negotiated by the types of locomotives proposed to be used on the section. There are thus a large number of limiting factors which have all to be taken into consideration before the most suitable alignment can be selected and surveyed in detail at the time of the final location survey before the actual construction is sanctioned and commenced.

Coming next to the actual construction of the railway line, while the economics of such construction would have been studied by the appropriate authority and ultimately sanctioned as necessary, the detailed final location survey enables the engineer to assess precisely the alignment to be followed, the extent of sub-grade work consisting of earth work in embankment and in cutting and tunnelling and the bridging, both minor and major, to be done in connection with the project. The location of stations to serve the needs of the country being traversed, depending upon the importance of the major villages and towns touched by the proposed alignment, is also determined as a result of the final location survey which enables the engineer to prepare a reasonably accurate estimate of the cost of the project with all the data made available by such survey. The actual construction of the earth work in embankment and in cutting and tunnels, of the culverts and bridges designed most carefully to carry the full discharge of maximum flood waters known, and of station buildings and staff quarters, followed by the linking of the railway track and the various yards at stations, both small and big, and the construction of necessary running sheds, turn tables, etc., for use by rolling stock and the provision of station equipment at various stations all follow one after another until the projected line can be said to be completed in all respects and handed over for running of trains on the section. With the collection of necessary rolling stock, namely, locomotives, carriages and wagons for running trains on the new section and the posting of necessary operating staff at stations and for manning the locomotives, etc., the line is now ready for being declared open for traffic. Before opening the line to traffic, the very necessary precaution of making a thorough check through the agency of the Government Inspector of Railways of the new construction comprising sub-grade work, bridges, track, stations and other appurtenances to ensure that they all comply with the standards laid down for such purposes, is doubtless taken. With this formality complied with, trains are now free to run on this section as necessitated by the dictates of traffic, both passenger and goods. This then is the story behind the opening of a new railway line in which, it will be obvious, the railway engineer plays a very important role.

Once the railway is opened to traffic, the engineer's responsibility is not finished. Actually, his responsibility increases after the opening of the line to traffic. He has to constantly attend to the maintenance of the railway line so as to keep it in good condition for the running of trains. Such maintenance become more intensive on sections where the traffic is heavy and where trains are required to run frequently and at fast speeds. In such cases the condition of the track which consists of rails laid on sleepers, either of wood, cast iron or steel, which in turn rest on a bed of stone or other ballasting material laid over earth work in embankment or cutting, suffers deterioration rapidly and need correction with regard to alignment, cross levels, longitudinal levels and wear and tear of permanent way materials. Such attention to track is given by gangs of men appointed over sections of 3 or 4 miles in length at the rate of between 2 to 4 men per mile depending upon the intensity of traffic on the section. It will thus be seen that every mile of track on a railway has 2 or 3 or 4 men attending to it every day in the year. The gangs of men thus appointed for sections of about 4 miles, work as one unit, overhauling the track in their charge little by little every day and thus ensure that the track in their charge is overhauled at least 3 to 4 times a year, besides giving emergent attention to any particular spot whenever required. Such intensive maintenance has to be closely watched by the engineer through his organisation so as to ensure that the railway line is at all times safe for the trains which run on it. Track maintenance is a very important charge of the engineer. During the monsoons, especially in places where rainfall is heavy, track maintenance becomes even more difficult and the utmost care and attention is required on the part of the engineer and his staff to maintain a good running track at all times of the year. Station yards with their numerous sidings and

points and crossings giving connections to the sidings also require considerable attention. As regards bridges, small and big, these also require constant watch and periodical repairs to keep them in good condition so that they do not fall into disrepairs and eventually fail or collapse, thus endangering the track which they support. Some of the major bridges across the rivers need meticulous attention to keep them in good condition. Rivers which carry large volumes of water during rainy season sometimes endanger the foundation of the piers or supports constructed in their bed and these require to be watched during the rains and immediately after the rains. Cases have been known where phenomenally abnormal conditions in this respect have endangered the safety of trains running over these bridges during the rainy months. On sections where the intensity of traffic is very heavy, as in the suburban areas attached to cities like Bombay, Calcutta, and Madras, the maintenance of track needs the utmost attention on the part of the engineer.

Quite apart from the construction and maintenance of the running line together with its sub-grade work, stations and yards, the engineers also have to construct and maintain various workshops and running sheds for the repairs and maintenance of rolling stock. Every railway has a large number of such major workshops and running sheds for repairs to locomotives, carriages and wagons. They have also large numbers of power houses, store sheds and other structures for use by the Electrical and Stores departments which require to be constructed and maintained in good condition. These workshops, power houses and store sheds have their yards attached to them to enable the free movement of rolling stock, machinery or stores to and from these sheds. All these require to be laid out properly and maintained so that these repair facilities and ancillary services are put to the maximum use. Fabricated steel work or concrete work, both reinforced and plain, are used in abundance in connection with these structures, and the engineer has to be an adept in the design, erection and maintenance of such structures.

In regard to staff quarters, roads and horticulture in railway colonies, not only has the engineer to design and construct these buildings to suit modern requirements, but he has to plan carefully the layout of these colonies with adequate number of social amenity centres such as institutes, clubs, children's parks, playfields, dispensaries and major hospitals whenever necessary. In deciding the construction of these social amenity centres, he has to keep abreast of times and plan them in such a manner that the staff colonies, small and big, at various stations are most suited to the requirements of staff living in them. The engineer has to realise that staff have to be kept happy and contented in decent homes and in hygienic surroundings and proper environment with adequate facilities for recreation, etc, if such staff are to give of their best in running the railways. Here again, the engineer is faced with the problem of planning, designing and constructing structures not only from the point of view of maximum utility and minimum cost, but from the point of view of an æsthetic sense to satisfy discerning eyes.

Office accommodation at various centres, including district, regional and general headquarters, is also the engineer's charge, and in modern times this is assuming more and more importance on account of the large increase in staff and the need to provide them with well ventilated and adequate accommodation for doing their work. Offices built in the early days are now totally inadequate with large increase in the volume of work and the consequent increase in staff with the result that additional accommodation is required at many places, as at the general headquarters of the railways in Bombay. The Churchgate offices are totally inadequate now and additional office accommodation has to be built for housing a large part of the staff who are now scattered in various hired buildings in the town. It becomes imperative for the engineer to plan such additional office accommodation on modern lines even if he chooses to be austere.

Engineers have not only to initiate construction of new projects but have often times to remodel yards to meet ever increasing requirements of facilities and to renew existing structures, especially of major bridges on running lines under traffic conditions without dislocating existing services. Here the ingenuity of the engineer is taxed to the utmost. One example which I can quote here, is that of the regirdering of the single line Ganga Bridge at Kashi consisting of 7 spans of 350 feet and 9 spans of 110 feet into a new double line bridge including the provision of an overhead roadway and footpaths, all under traffic conditions without stopping even a single train of the total of 52 trains which were running on this single line section. This is at once one of the most intricate and complicated pieces of engineering work a railway engineer was called upon to execute. This work was actually done in a period of just 24 months. There are several instances like this where the Railway engineer is called upon to rehabilitate existing assets on the railways under traffic conditions and I can assure you that he rises to the occasion every time. The role of the railway engineer will, I am sure,

(*Continued on page 24*)

Western Railway's Rs. 100 Crore Plan
Larger Traffic, More Amenities and Staff Welfare

By Shri M. Ganapati, General Manager, Western Railway

The Western Railway has a second Five Year Plan costing Rs. 100 crores. It will, in addition, receive fresh rolling stock costing about Rs. 69 crores. The Railway's Plan provides for relief in over-crowding in its suburban services, transport of larger passenger and goods traffic, increase in line capacity and survey of new lines, introduction of new Janatas and more amenities for rail-users. The Railway will spend Rs. 6,00,00,000 on quarters for staff including a new township at Kotah, and Rs. 2,53,00,000 on staff welfare works, including Rs. 2,28,00,000 on medical amenities.

OVER a century back, India saw the beginning of the railway system in 1853 with the construction of a small line from Bombay to Thana on what is now the Central Railway. The other rail system, the Western Railway, with its headquarters at Bombay, the commercial capital of India, saw its beginning at Surat, which was the first foot-hold of the British in this country.

The Western Railway feeds the fertile fields of Gujerat with an intensive service. The distance between Bombay and Ahmedabad is served by a double line track except for a small portion between Baroda and Anand, which is also soon to be provided with a double line.

From Ahmedabad, the metre gauge track leads one into the equally rich state of Saurashtra, and skirting along the desert of Rajasthan provides an alternative route to Delhi and East Punjab. The metre gauge system of this railway will shortly provide a link between the north and south with the construction of the metre gauge line from Khandwa to Hingoli.

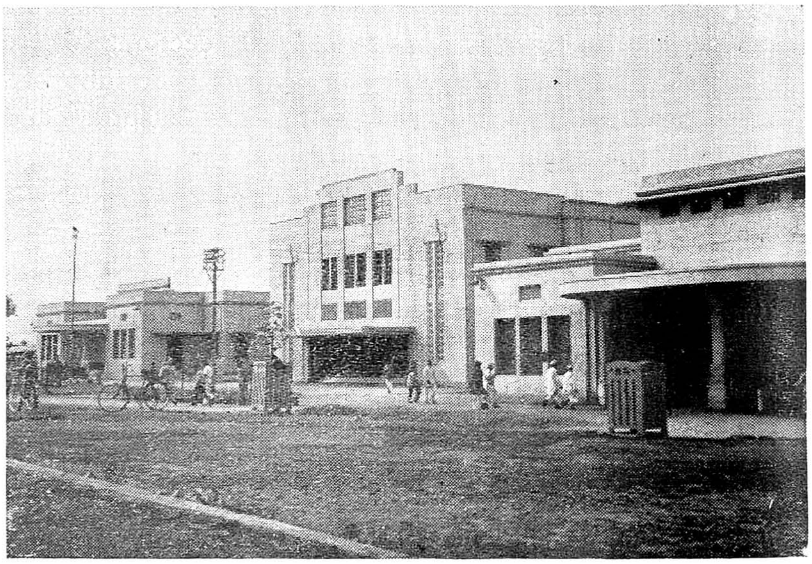

The new Mehsana Station, which was opened in July 1954.

Formed in 1951 by the amalgamation of the B. B. & C. I. Railway, Jaipur, Rajasthan and the Saurashtra Railways—the latter was itself the result of amalgamation of various small railways owned by the Princes of Kathiawar—the Western Railway consisting of a route

---

(Continued from page 23)

be conceded as a very varied one demanding the utmost ingenuity, resourcefulness, care and devotion to duty.

In talking about new construction, both of new railway lines and projects connected with works calculated to bring self-sufficiency to railways in the matter of rolling stock, mention may be made of a few important projects like the Assam Rail Link project, Kandla-Deesa, Chunar-Robertsonganj, Pathankot-Mukerian railway constructions, conversion of Gandhi-dham-Bhuj narrow-gauge line into metre-gauge, restoration of Shoranur-Nilambur and Madura-Bodinaickanur lines, the Chittaranjan Locomotive Works and the Integral Coach Factory project, which were all completed in recent times in record time, to meet the urgent requirements of the Indian Railways. The skill, energy, enthusiasm, devotion to duty and the team spirit displayed by the engineers engaged in these construction works have alone been responsible for the outstanding results achieved. There are many more projects on the anvil during the second five year plan and there is title doubt that the engineers will play their part in ensuring satisfactory completion of these projects, not only in time but within the estimated costs.

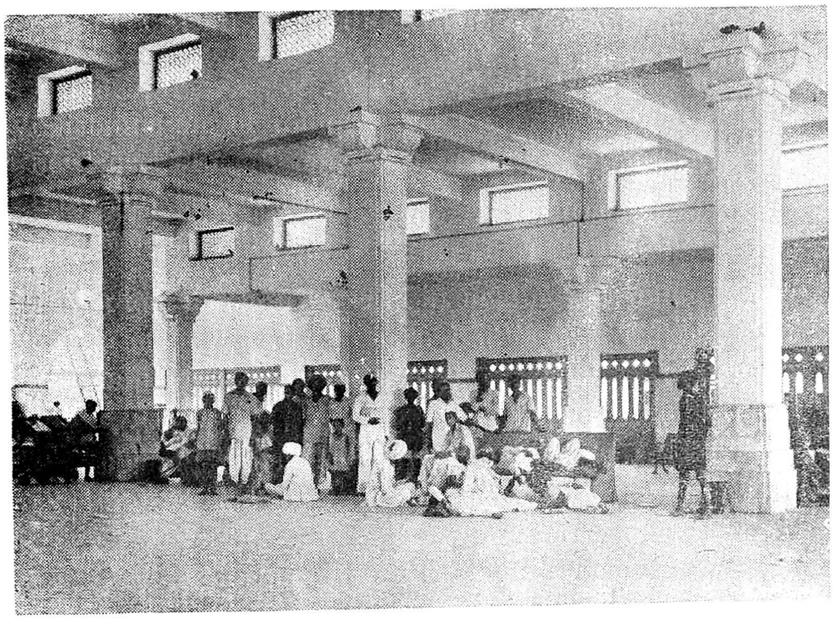

Third class waiting hall at the newly built Mehsana Station.

mileage of 5,614 miles was at once faced with the task of providing additional facilities necessary to cope with the large-scale development in the field of agriculture and industrialisation which followed independence.

The problem of bringing the amalgamated metre gauge lines to the standard of maintenance and operation of Government railways also meant a considerable amount of planning and execution of various works. With the coming of independence, this Railway was also faced with the task of finding transport capacity to replace the loss of Karachi port. It was, therefore, natural that during the first Five Year Plan stress should have been laid on the clearance of a heavy backlog of renewals and replacements which could not be carried out during the war and immediately thereafter.

"SPECTACULAR" PROGRESS

The progress of Western Railway's schemes for rehabilitation of rolling stock and for the removal of bottlenecks that hampered the progress of industrialisation and all-round development, has been almost spectacular.

Without much increase in its holdings of rolling stock and locomotives, the Western Railway carried last year 305 million passengers against 258 million passengers in the first year of its formation; similarly, the tonnage of goods carried increased from a little over 13 million tons to well over 16½ million tons.

Over 400 miles of metre gauge lines were completely renewed and nearly 900 miles were partially renewed.

Known as "the Line of bridges", this Railway had to face the task of strengthening bridges and culverts to enable heavier engines and heavier loads to be carried at faster speeds. As many as 120 bridges between Bombay and Baroda alone, a distance of 240 miles, were strengthened during the first Plan. A new high-level bridge of about 1,500 feet in length was completed over the Mahi river at Sevalia on the Anand-Godhra section.

This period saw the construction of the Kandla-Deesa Railway, a length of about 170 miles, designed to provide an alternative cheaper and quicker route between the west and the north of India and to serve the developing port of Kandla as a relief to Bombay port. The construction of the Indore-Dewas-Ujjain line, the Raniwara-Bhildi line north of Kutch for establishing an alternative outlet from Kandla to its hinterland, and the Fatehpur-Shekhawati-Churu line has also been taken in hand and works are in progress.

The line from Ahmedabad to Kalol was doubled and the section from Kandla to Bhuj, a distance of 30 miles of narrow gauge line, was converted to metre gauge during the first Plan period. A large number of line capacity works for increasing the sectional capacity at various places have also been carried out. These include the construction and opening of 35 new crossing stations, the provision of new reception and despatch lines at various stations with a view to increasing terminal facilities, additional loop lines at various stations including extension of existing loops and signalling arrangements etc.

SECOND PLAN

The Western Railway has extensive plans for development in the future. The Western Railway drew up a Second Five Year Plan costing Rs. 149 crores excluding rolling stock. Due to shortage of funds this has been reduced to Rs. 100 crores, and within this amount it is proposed to cater for a 15 per cent increase in passenger traffic and 25 per cent increase in general goods traffic, in addition to meeting the additional requirements of industries and agricultural projects for which a definite demand for transport can be anticipated on the basis of information available at present.

To cater to this traffic, the Ratlam-Godhra-Nagda section and intermediate section between Baroda and Anand will be doubled, and double line working would be established from Bombay to Ahmedabad and from Bombay to Nagda. In regard to new construction, the survey for the Loharu-Pilani link, a distance of 13.75 miles, has been completed. The survey of the Kotah-Chitorgarh line (104 miles) is in hand, and it is also proposed to carry out surveys for the following line

End view of the new bridge at Sevalia which was opened for traffic from 28th September 1954. This bridge was built at a cost of half a crore of rupees.

projects: Dungarpur to Ratlam *Via* Banswara, Bhavnagar to Tarapore, and a broad gauge line into Saurashtra.

Additional line capacity works, bridge rehabilitation, track renewal, workshop expansion, signalling and safety arrangements, are all included in the Second Plan. Additional locomotives, coaches and wagons costing about 69 crores of rupees would be obtained to enable this railway to cater for the additional traffic.

RAIL-USERS' AMENITIES

During the first Five Year Plan, the Western Railway spent Rs. 200 lakhs in looking after the welfare of the passengers. Of particular significance is the rebuilding of stations like Baroda, Surat, Rajkot, Indore, Ujjain and Mehsana with modern facilities. The waiting halls, concourses, refreshment rooms, lavatories and booking windows at these and other stations have been designed to give the maximum comfort to the public. The remodelling of the Churchgate, Godhra and Jaipur and other large stations is contemplated.

Janata Express trains have been introduced between Bombay and Ahmedabad and it is proposed to introduce similar trains between Bombay and Delhi and between Ahmedabad and Delhi.

During the second Five Year Plan, an allocation of Rs 230 lakhs has been made for the remodelling of stations to increase their usefulness for goods and passenger traffic.

Owing to the paucity of coaches, over-crowding is endemic on the Indian Railways, and some sections of the Western Railway are particularly bad, such as between Ahmedabad and Mehsana. Passengers on the Bombay suburban section where there is heavy overcrowding, particularly during the peak hours, will be interested in the relief that is being planned for them.

SUBURBAN TRAFFIC

The three lines between Bandra and Borivli have already been electrified to cope with the additional traffic in the suburban section. It is further proposed to spend Rs. 32 lakhs on the provision of additional facilities and for bringing these three lines into use for suburban traffic also. Additional electrical multiple unit stock has been ordered and is expected to be delivered during 1956-57 and 1957-58. One of the big schemes in the second Plan is the remodelling of the Churchgate station.

With the provision of these facilities it should be possible to run additional trains which can be introduced on receipt of the 25 multiple electrical coaches which are on order. The new Churchgate station, which will also provide additional accommodation for the overflow of the Western Railway headquarters office, will be a modern, multi-storeyed structure.

The suburban traveller whose number has increased from 145 million to 173 million during the last two or three years may take consolation in the fact that he is no worse off than his "comuter" on the English or American railways.

On the claims side, apart from expediting the settlement of claims, a claims prevention organisation has recently been set up with a view to improving the security afforded to packages in Railway custody during transit or otherwise. It is the common experience of the public that settlement of claims either for compensation or refund is normally very expeditious on the Western Railway.

STAFF TRAINING AND WELFARE

While great stress is being laid on efficiency and improvement in working, equal attention is also being devoted to the betterment of staff and their welfare. Training of staff has been given a very important place in the second Plan of the Western Railway. At present, two training schools are functioning, one at Ajmer and the other at Udaipur. In the second Five Year Plan, provision has been made for the development of the school at Udaipur at an estimated cost of Rs. 62 lakhs, and for the establishment of a school at Dohad for

(*Continued on page 27*)

Survey of 868 Central Railway Stations
More Passenger Amenities, Faster Trains

By M. N. Chakravarti, General Manager, Central Railway

The Central Railway has carried out an exhaustive survey covering all its 868 stations to find out what basic rail-users' amenities are lacking, and as a result, plans are being made to provide more amenities in stages. This article relates how as a result of a vigorous drive the Railway is now able to carry more traffic. Plans are also under way to run faster trains on certain sections......

THE first Five-Year Plan commenced with the Central Railway's assets badly in need of rehabilitation. Traffic increased during the war period and has continued to increase thereafter, and this has had to be carried with attenuated and overage assets, by making more intensive use of them.

Considerable arrears had to be made up in track renewals, replacement of locomotives and rolling stock and other assets and this claimed the major portion of the funds available. Although rehabilitation was the keynote, the needs of increasing traffic were not overlooked. During the first three and a half years of the Plan period, additional traffic facilities were provided on a somewhat limited scale to cater for the increasing needs of traffic, then estimated to be of the order of 2 per cent per annum.

It was towards the end of 1956 that the Railway Board directed the individual Railways to prepare themselves to carry 20 per cent more traffic during the busy season of 1955-56 than what they did during the busy period of 1954-55. This entailed considerable expansion in the Railways handling capacity.

INCREASING TRAFFIC CAPACITY

Additional crossing and block stations had to be provided to increase line capacity. Loop lines had to be lengthened and additional loops provided at a number of stations. It was estimated that on the Central Railway 19 new crossing stations would be required and additional lines would be necessary at 20 other stations. The handling capacity of 16 yards through which the stream of traffic passes had to be improved, including some major yards. Improvement of terminal facilities in large goods-sheds, facilities for transhipment at break-of-gauge, junctions, facilities at repacking points were required to be undertaken. It was also considered necessary that efforts should be made to improve locomotive usage and wagon usage by cutting down drastically all avoidable delays. Detailed plans had to be chalked out to achieve all these objectives.

By the end of November 1955, most of the works planned were completed. For example, work went on unceasingly during the monsoon in Bombay last year to improve goods-shed facilities at Wadi Bandar, to enable it to handle an additional 100 wagons. Extensive work

(Continued from page 26)

imparting training to technical apprentices at a cost of about Rs. 20 lakhs.

An interesting feature of the plan of this Railway is the provision of Rs. 20 lakhs to be spent on various training centres where class IV staff would be given instruction in accordance with the recommendations of the Accident Enquiry Committee. Similarly, staff in the Mechanical Department will be provided with training facilities at an estimated cost of Rs. 25 lakhs.

For efficiency, it is essential that the staff should be in good health, both physical and mental. Towards this objective, over 253 lakhs of rupees would be spent, of which Rs. 228 lakhs would provide medical assistance to the staff and their families During this period, Rs. 600 lakhs would be spent on the provision of staff quarters, and on the creation of a township at Kotah where a wagon repair shop is to be established.

All this expenditure on behalf of the staff is being incurred on the well-established economic theory that man does not live by bread alone, and that for a worker to give his best, he should be guaranteed entire satisfaction of certain minimum needs.

The Western Railway embarks on the second Five Year Plan with courage and confidence. If past achievements are any indication the future of this Railway is bright in its sustained efforts in the service of the public and the nation.

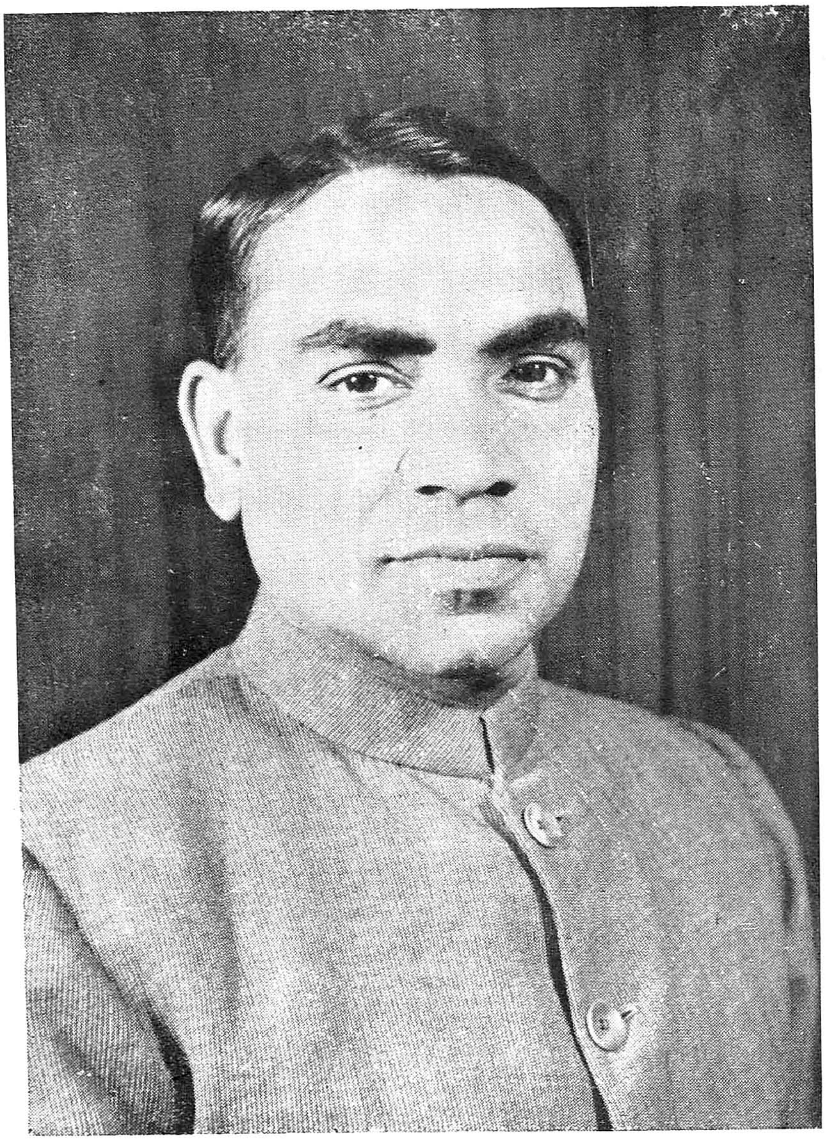

Shri M. N. Chakravarti.

was undertaken at the Ghorpuri tranship shed which was generally considered a traffic bottleneck. Traffic moving across this junction was previously subjected to quota restrictions, but from the middle of December, it was possible to do away completely with the quota regulation and to allow booking freely.

A number of improvements of a minor nature were effected in loco workshops and running sheds to improve the out-turn of locomotives. Special efforts were also made to improve the availability of wagons. As many as 8 to 10 per cent of the total number of wagons on the Railway used to be out of commission due to damages. Through a vigorous drive, it was possible to bring down the number of damaged wagons to 3.5 per cent. Besides, a number of wagons which had outlived their existence were "rehabilitated" temporarily. To reduce the incidence of hot axles on goods trains, a number of "first aid" posts were set up near marshalling yards.

Thanks to the co-operation of the mercantile community, it was possible to improve further the availability of wagons for loading by keeping goods sheds open for longer hours than before and by sometimes loading in open wagons commodities which used to be moved only in covered wagons.

BETTER OPERATIONAL EFFICIENCY

As a result of these steps it is heartening to note that the number of wagons loaded on the Central Railway (B.G.) during the six months from September 1955 to February 1956 was ten per cent more than what it was during the corresponding period last year.

The efficiency of operation on the Railway improved enormously during the six months. For example, the figure of "wagon miles per wagon day", which is a measure of the number of miles a wagon moves in one day on an average (inclusive of delays at terminals, transhipment and other points), improved steadily from 53.5 in February 1955 to 59.6 in February 1956. Likewise, the "net ten miles per wagon day", which is a measure of the quantum of traffic moved by a wagon each day, improved from 714 in February 1955 to 808 in February 1956.

During the second Five-Year Plan we will be called upon to carry more and more traffic. We are gearing our administrative machinery in order that we may fulfil our future obligations.

While we have been able to achieve substantial results in the field of goods movement, we have not been able to achieve much in regard to passenger train services.

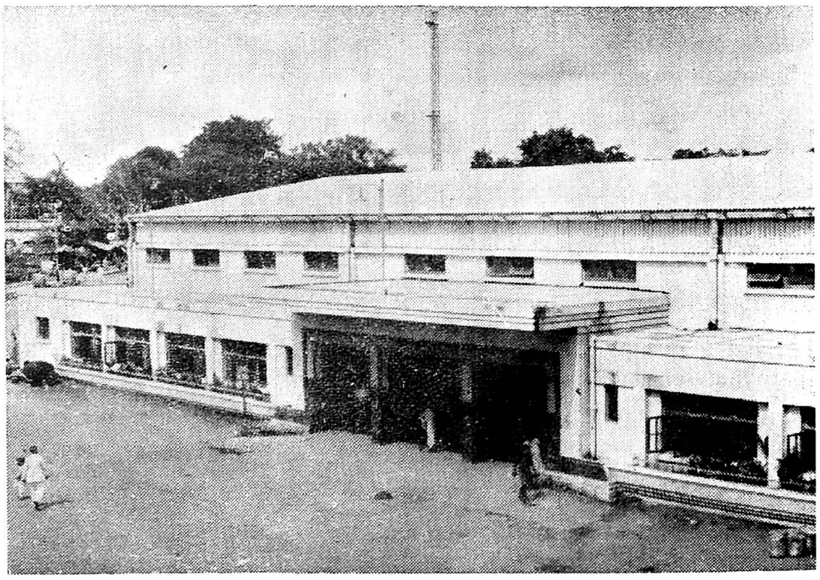

The exterior view of the new III Class Waiting Hall and Booking Office at Nagpur station. Almost 3 crores of rupees have been expended on providing passenger amenities over the Central Railway since 1949 when the scheme was introduced.

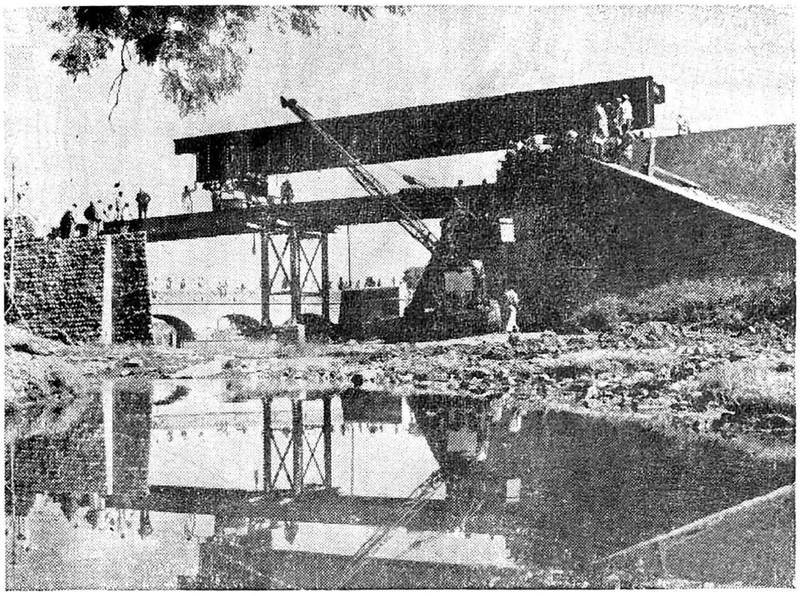

The work of construction of the 187 mile long Khandwa-Hingoli Metre Gauge rail link was commenced in March 1954. This project will link the 10,100 mile long Northern and 4,900 mile long Southern Metre Gauge systems of the country. This work is by far the largest Engineering work undertaken by the Central Railway during the first Five Year Plan. Considerable headway has already been made in the construction. 53 miles of earth work in formation has been completed and work is in progress on earth work in formation over 70 miles whilst masonry in bridges is in varying stages of progress for over 100 miles. More than 20,000 workmen are busy on this project which is expected to be completed in 1959 at an estimated cost of some 9 crores of Rupees. The project is a symbol of the progress made on the Central Railway, the Pioneer Line of India.

Photo shows the launching of a 60 foot skew girder across the Rameshwar Nalla at the north entry into Khandwa.

The punctuality of passenger carrying trains has unfortunately been low and we are making considerable efforts to improve it. Owing to limitations of rolling stock and locomotives, it has not been possible to effect substantial improvements in the quality of the existing train services or to improve their frequency, except on a few branch lines.

Efforts to procure additional stock to augment the Bombay electric suburban services have, however, just borne fruit and the first consignment of coaches from Italy has just arrived. In the coming months, we hope to receive many more coaches. While every effort will be made to run additional trains, the need for replacing old and worn out stock will have to be constantly borne in mind.

FASTER TRAINS

As a result of signalling improvements, it would be possible in the near future to run faster trains on certain sections. The Itarsi-Nagpur line which lies along the Grand Trunk Express route is being provided with a new type of signalling called "Multiple Aspect, Upper Quadrant Signalling". When this is completed and the section between Wardha and Balharshah is relayed with 90 lb. rails, it will be possible to speed up the Grand Trunk Express train further.

It is interesting to know that the twelve-coach corridor Janata train between Delhi and Calcutta, which was inaugurated on October 2 last year, was built in the Matunga Workshops on the Central Railway. The experimental First class chair car, now running on the Northern Railway, was also built in the same Workshop recently.

PASSENGER AMENITIES

Last year an exhaustive survey was undertaken by the Central Railway on the nature and extent of deficiencies in basic amenities provided at all its 868 stations and also of the additional amenities needed at the bigger stations. The deficiencies at some of the stations are being made up in the current year's amenities programme but there will still remain a number of amenities to be provided at different stations.

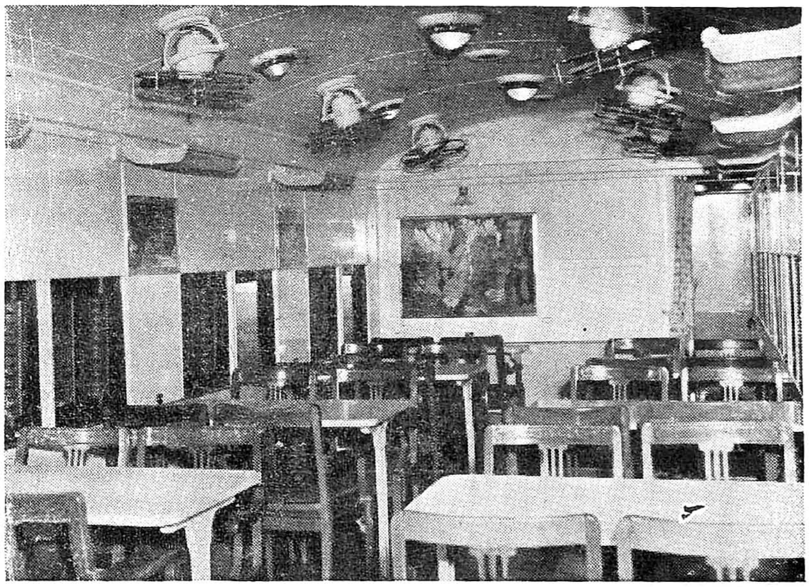

Interior of the Dining Car of the fully corridored Janata Express which now runs between Howrah and Delhi exclusively for the 3rd class passengers. The Dining Car is well lighted and is provided with many fans to keep it cool. Dust-proofing minimises this nuisance to diners. The panel have been decorated with photos and paintings. In the background may be seen a painting of a famous scene on the outside of cave No. 17 at Ajanta. The furnishing of Dining Car, like the rest of the train, was executed at the Central Railway's Carriage & Wagon Workshops at Matunga last year. The train performed its inaugural run on Gandhi Jayanti, 1956.

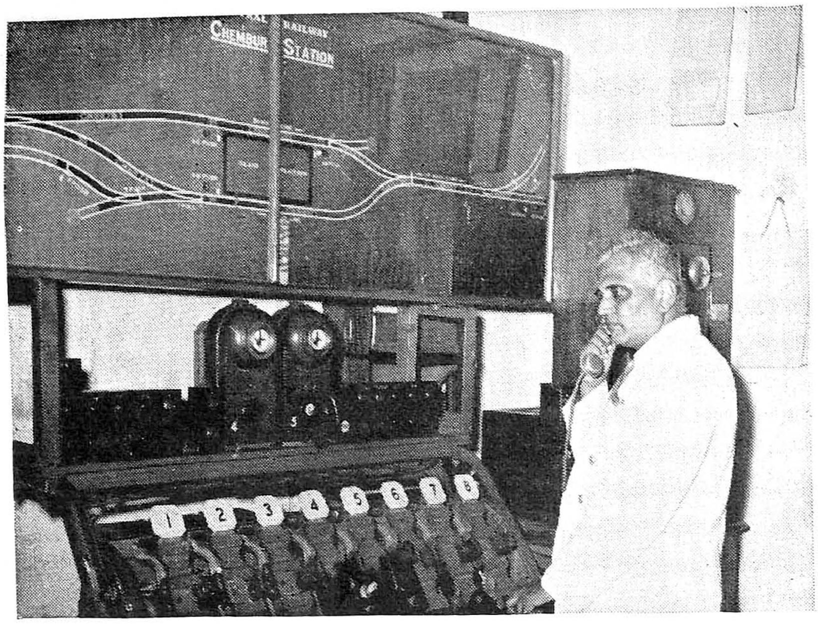

For the first time in India, the Automatic Block System on a single line section was introduced between Kurla and Chembur in the latter half of 1954—One of the more important signalling projects undertaken by the Central Railway in the first Five Year Plan. With this modern signalling system more than 90 trains a day are now being run between Kurla and Chembur, a symbol of the progress made by Central Railway, the Pioneer Line of India, under the first Five Year Plan.

Photo shows the miniature lever frame installed in the Station Master's Office, Chembur, for operation of colour light signals and power operated points.

Amenity works costing over a lakh of rupees have been carried out at Ahmednagar, Chalisgaon, Kings Circle, Burhanpur, Banda, Belapur, Gadarwada, Itarsi, Manikpur, Jalgaon, Masjid, and Satna — to name a few stations. At a number of other medium and small stations, a number of works have been carried out including improved water supply, waiting arrangements, food stalls, surfacing and cover over platforms. Some of the major works are now in progress at Jabalpur, Sholapur, Raja-ki-Mandi, Agra Cantt., Nasik Road, Katni and Kurnool Town stations.

In connection with the 2,500th anniversary of Lord Buddha, extensive amenities have been provided at Sanchi station, including extension, raising and paving of platforms, construction of two retiring rooms, etc. at a cost of about Rs. 2,00,000.

DIVISIONAL SYSTEM

A chronicle of achievements in other spheres of activity of the Central Railway would be too long to mention within the compass of a short article. We would, however, draw attention to a very significant change in the system of administration. It is now widely realised that decentralisation and devolution of authority are essential for the successful administration of a big unit like the Railway. The introduction of the full divisional system of working where it does not exist, with a wide measure of decentralisation of authority, has been decided upon by the Railway Board as a matter of policy. The Central Railways which has an organisation very close to the full divisional system has introduced it on two of its existing divisions, viz., Secunderabad and Bombay. Very active steps are being taken to extend it to the remaining divisions, and before the next year we hope that it would have been introduced in practically all the divisions.

WORLD STEEL OUTPUT WILL BE DOUBLED

Mr. Alfred Krupp, proprietor of the well-known German steel firm of Krupps, in an informal talk with the Pressmen in New Delhi said he estimated that in the next 30 to 40 years, steel production in the world would have to be doubled to meet demands. India would require large quantities of steel for her second Five Year Plan.

Referring to the steel plant at Rourkela in Orissa for which Krupps along with another West German firm, Messrs. Demag, are technical consultations, Mr. Krupp said that by October 1, 1958, the first blast furnace of the plant would be ready.

The Rourkela plant, he said, would be one of the most modern steel plants in the world.

Asked whether the German firm would provide credit for the steel project, Mr. Krupp said that his firm was not in a position to do it and it was for the West German Government to consider the matter.

Apart from the State-sponsored steel project, he said, his firm was building three cement factories for private firms in India.

Mr. Krupp disclosed that his firm had also offered to provide machinery for the lignite project in South India. The firm had also supplied locomotive boilers and other locomotive parts to the Indian Railways, he said.

IN YOUR OWN INTERESTS

HOW TO PURCHASE TICKETS

Buy your tickets only at the proper place. The authorised offices are (i) the Booking offices at the railway stations, (ii) the Town or City Booking Offices, (iii) the out-Agencies, (iv) Travel Agents. Never buy tickets from any other source as that may lead you to trouble. Please note that tickets are not transferable.

Buy your tickets in the proper time. You can avoid unnecessary excitement and trouble if you come to the station in good time, that is at least half an hour before the scheduled departure of your train. The Time Tables of the Railway are on sale at Booking Offices and Bookstalls.

Buy your tickets in the proper manner. Queue up at the Booking Window and you can get your ticket easier and quicker than by crowding at the counter.

By handling in the *exact fare in good coins or currency* you get the ticket easier and quicker, and save for yourself and the Booking Clerk time and trouble.

Check up your ticket and money before leaving the counter and draw the attention of the Booking Clerk to any discrepancy you may notice.

(Inserted in the interests of Travelling Public)

CLEANLINESS LEADS TO HEALTH AND HAPPINESS

Clean orderly habits contribute to general health and welfare and as such to happiness and prosperity; they are more important than medicines.

Cleanliness prevents disease; medicine only attempts to cure.

Cleanliness of the person, of the houses and colonies, reflects discipline in the individual and the community. Discipline is the foundation stone for progress of oneself and the country. Cleanliness is a good habit. It is also cheap.

All Railwaymen should set an example of cleanliness. This will help others and themselves.

Printed and Published by Sri T. S. S. Rao, Public Relations Officer at S. R. Press for the "Southern Railways Magazine", Manojiappa Street, Fort, Tanjore.
Managing Editor : T. S. Krishna Rao.